RATHI®

COUPLINGS FOR PUMPS & COMPRESSORS

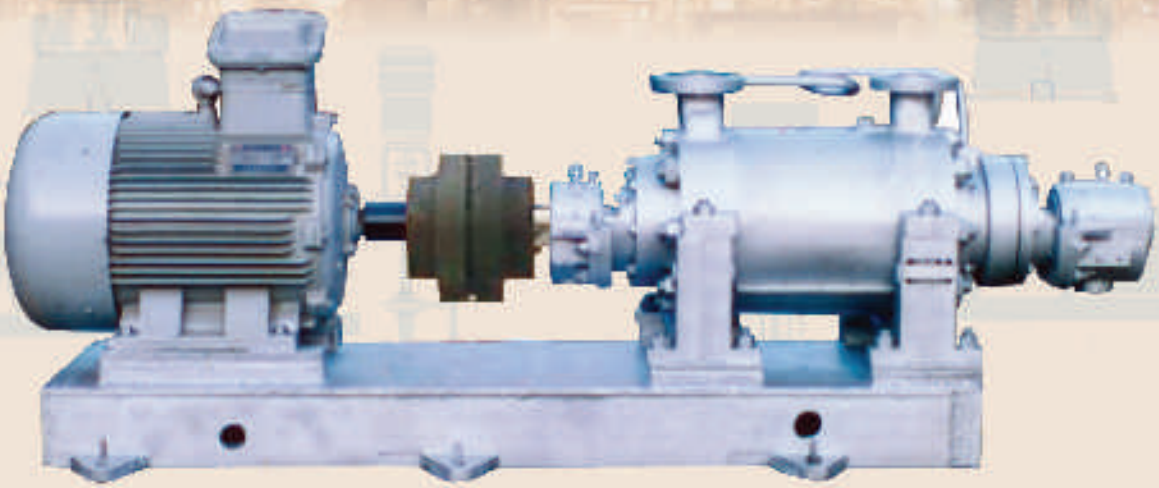

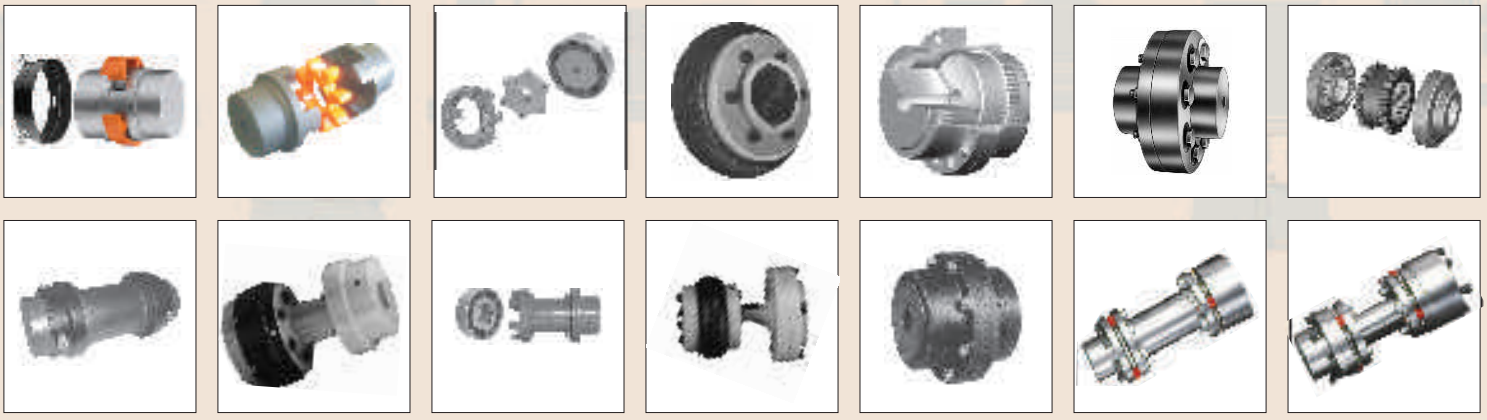

www.rathicouplings.com

RATHI® COUPLINGS :

You've made the right choice, when you choose Rathi. The leading source for flexible Jaw Couplings. Rathi offers you much more – the widest range of power transmission products under one roof. From the smallest to the largest, be it jaw, gear, grid, disc or other special couplings. When it comes to size and selection you'll find them all in our range.

For more than 45 years, Rathi has been supplying Power Transmission Products to a World wide market. We follow world quality standards in our manufacturing. Rathi's uncompromising dedication to the interests of it's global customer base has earned Rathi an International reputation for Engineering Integrity, Production Superiority, and Service Responsibility and has brought the coveted ISO 9001 Certification for manufacturing quality. Today, Rathi products are found all over the world.

YOU NAME THE TYPE OF PUMP & COMPRESSOR, WE HAVE A COUPLING FOR IT

Water Pumps, Slurry Pumps, Sewage Pumps, Submersible Pumps, Back Pull out Pumps, Multistage Pumps, Split Case Pumps, API Pumps, Chemical Process Pumps, Hydraulic Pumps, Metering/Dosing Pumps, Gear Pumps, Paper Stock Pumps, Screw Pumps, Mono Pumps, Vacuum Pumps, Fire Pumps, High Pressure Pumps, Stationary Screw Compressors, Piston Compressors, Turbo Compressors and many more....

RATHI® COUPLINGS : USERS WORLDWIDE

UK
- Flowserve Pumps
- Plenty Mirrlees Pumps
- Sterling Fluid Systems
- Armstrong, Torres,Anchor
- Northern, Centrifugal, SR
- Marshall, Sulzer, Primax,
- Pump Services
- Weir Pumps
- Sterling Pumps
- SPP Pumps
- HMD Pumps
- Global Pumps
- Crest Pumps
- Primax Pumps
- Vanton Pumps
- Chemquip
- Chemvac Pumps
- Armstrong Pumps
- S R Pumps
- Torres Pumps

EUROPE
- Flow Serve - France
- Johnson Pump - France
- Sterling Pump
- BBA Pumps
- Goulds Pumps
- Pompen Bv.
- Wernert Pumps
- Ebara Pumps - Spain
- Johnson Pumps - Sweden
- K+H - Czech Republic
- ABS Pumps - Sweden

OTHERS
- Monoflo - Singapore
- Adnil - Singapore
- P.N.V. - Thailand
- Transwater - Malaysia
- RNE Pump - South Africa
- PNV Polytech - Thailand
- 2nd Pump - South Africa
- Optimised - South Africa
- Al ansari - Oman
- Ali M Th. Alghanim – Kuwait
- Hauroken (Flow Serve) - Hong Kong
- Sigma Pumps - Bangladesh
- Helwan Diesel Engines - Egypt
- Al Farid - Egypt
- Techniq International - Dubai
- Arison Gulf - Dubai
- Danway - Dubai
- M.A.H.Y. Khoory - Dubai
- NAFFCO, Jebel Ali - Dubai
- Mohd Bin Masaood - Abu Dhabi
- Al Sagar Engg. - Abu Dhabi
- Saudi Pump Factory - Sau. Arabia
- KSB Pumps - Saudi Arabia
- Eners International - South Korea
- Chainex - Taiwan
- Homs Refinery, Homs - Syria
- General Fertilizer Co. - Syria
- King Golden Corp. - Taiwan
- Goulds Pumps - China
- Banias Refinery - Syria

INDIA
- Kirloskar Pumps
- Ebara Pumps
- Sulzer Pumps
- KSB Pumps
- Kishore Pumps
- Mather & Platt
- Willow Pumps
- Flow Serve
- WPIL (Worthington Pumps)
- Jyoti
- Johnson
- Roto Pumps
- Process Pumps
- Beacon Weir
- Microfinish Pumps
- Bharat Pumps & Compressors
- Chemlin Pumps & Valves
- Henabh Pumps
- Anticorrosive
- Tushaco Pumps
- SU Motors
- Voltas
- BDK Pumps
- Sam Pumps
- B.H.E.L
- Calama Pumps
- Akay
- Greaves
- Blue Star
- ITT Pumps

AUSTRALIA
- KSB Ajax Pumps
- All Pumps
- ASM Pumps
- Diesel Parts & Service
- BKB Pumps
- Ebsray Pumps
- Kelair Pumps
- Malcolm Thompson Pumps
- Pump Engineers
- Regent Pumps
- Sihi Pumps
- Flowserve
- Southern Cross Pumps
- Dyna Pumps
- ITT Flygt
- Skyline Pumps
- Southwest Pumps
- Sykes Pumps
- Weir Engineering
- Style Industries

RATHI® COUPLINGS: CERTIFICATIONS

QUALITY SYSTEM

ISO-9001:2008

PRODUCT

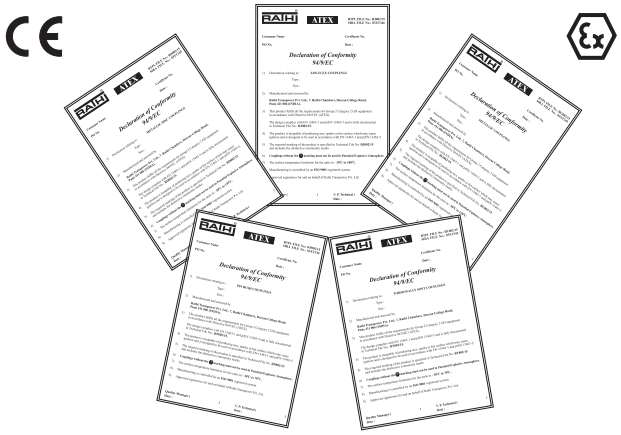

ATEX : Sira03XT342 to Sira03XT346

RATHI® COUPLINGS: APPLICATION DATA SHEET

1. OPERATING CONDITIONS	
(a) Driver equipment :	Electric Motor ☐ Turbine ☐ I.C. Engine* ☐ any other pl. Specify _____ *No. of engine cylinders > 1 / 2 / 3 / 4 / 5 / 6
(b) Driven equipment :	Centrifugal / Reciprocating Pump: any other pl. Specify _____
(c) No. of start-stops :	Frequent ☐ Moderate ☐ Rare ☐
(d) Hours per day duty :	8 and under ☐ Over 8 to 16 ☐ Over 16 ☐
(e) Operating temp :	Normal Ambient temp / any other pl. Specify _____
(f) Suggested S. F. By customer if any : _____	

2. APPLICATION			
(a) kW ☐	HP ☐	RPM ☐	
(b) Shaft dia : Ø	Driver ☐	Driven ☐	
Tolerance on FB / KW - Std Ø	H7 / KW	JS9	or Specify _____
(c) Distance between shaft ends (DBSE) :			
(d) IC Engine Flange details: (Fly Wheel)	SAE No.:	OR	No. of holes - _____ P. C. D. - _____ Hole dia - _____

3. CUSTOMER REQUIREMENTS

(a) Suggested / required type of coupling (if any): _____

(b) Dynamic Balancing Required (as per ISO 1940): Std. Gr. 6.3 / Gr. 2.5 Specify _____

(c) Material Requirement : Std. ☐ Specify ☐

(d) Any other specific requirement : API 671 ☐ or 610 ☐

(e) Quantity :

Note : Enquiry Data Sheet available online, visit www.rathicouplings.com

RATHI® COUPLINGS: FEATURES & APPLICATIONS

COUPLING CATEGORY			FEATURES				APPLICATIONS				
TYPE	Non-Spacer	With Spacer	GENERAL	API	ATEX	Non-spark	Slide vane rotary vaccum pumps	Root Vaccum pumps	Stationary Scew Compressors	Piston compressors / turbo compressors	Centrifugal pumps
JAW FLEX (STRAIGHT JAW)	L/SW	RRS/SWS	Fully machined Hubs. Inherence Balanced Eyeball alignment - Single Ease of Inspection & rubber part replacement in 5 min. No down time Low initial, operation & replacement cost No lubrication - Long life Spiders available in synthetic rubber, PU & Hytrel L/SW/RRS parts are same Low Inventory - Economical Available with Taper Bush		■		■	■	■		■
JAW FLEX	RN	RNS(H)	Simple to install & easy maintenance Low weight and low moment of inertia No Lubrication - Long life Flexible elements available in synthetic rubber & PU Varying stiffness characteristics High internal damping capacity Available with Taper Bush		■		■	■	■		■
JAW FLEX (CURVED JAW)	RFC	Refer Note	Simplicity of construction - Both hubs are same Simple / easy assly. & maintenance Provides torsional vibration isolation & damping Low cost No lubrication Long life Available with Taper Bush		■		■	■	■		■
CURVE FLEX (CURVED JAW)	RRJ	Refer Note	Axial Plug in, backlash free Machined all over - Inherently balanced Electrically insulated Spiders available in 2 hardness Blind assembly Varying stiffness suitable for damping vibrations No Lubrication - Long life		■		■	■	■		■
B-FLEX (PIN BUSH)	RB	RBS	Compact – Close coupled Independent Running of prime cover Special barrel shaped bushes provide varying stiffness - Available in Rubber, PU Simple in construction, easy to install No lubrication - Long life - Economical Inspection and replacement of bushes without disturbing original alignment		■			■	■		■
CONE-FLEX (FLEX RING)	RC	RCS	High Torque capacity, compact size, low weight Independent running of prime cover Easy to assemble & Maintain - No lubrication - Long life - Economical Reduces vibrations & noise arising from severe torque fluctuations Cone rings available in rubber & PU Inspection & replacement of cone rings without disturbing original alignment Available with Taper Bush		■			■	■		■

RATHI® COUPLINGS: FEATURES & APPLICATIONS

COUPLING CATEGORY			FEATURES				APPLICATIONS				
TYPE	Non-Spacer	With Spacer	GENERAL	API	ATEX	Non-spark	Slide vane rotary vaccum pumps	Root Vaccum pumps	Stationary Scew Compressors	Piston compressors / turbo compressors	Centrifugal pumps
SLEEVE-FLEX	RBW	Refer Note	Torsionally soft couplings Double engagement coupling Dampen vibrations & absorb shocks No lubrication - Long Life No Maintenance Most suitable for safety of equipment			■		■	■		■
TYRE-FLEX	T/TO	RST	Torsionally soft couplings Absorbs vibrations & impact loads Max. Angular misalignment than any other type No lubrication Long life Available with Taper Bush		■				■		
GEAR-FLEX	RGD/RGS	RGDS/RGSS	High power to weight ratio Conforms to AGMA Standard Half coupling can be replaced with any AGMA Brand Compact Assembly Temperature resistance upto 120° - Require lubrication Large bore capacity to suit rating Teeth - Triple Crowned Economical		■	■					■
DISC-O-FLEX	LMK	LM	High power-to-weight ratio - light weight No lubrication - long life High speed & high temperature Long spacer lengths available 2 hub designs to accommodate large shafts		■	■			■		■
	Refer Note	EM	Plug in Design - Easy Installation Incorporates Anti-flail design feature Floating shaft coupling Backlash free High power to weight ratio High speed - high temperature 4 hub designs to accommodate large shafts	610 & 671	■	■			■	■	■
	Refer Note	EMT/ EMD	High Speed / High power coupling Incorporates anti-flail backlash free High speed - high temperature	610 & 671		■			■	■	■
	Refer Note	RSK	Plug in Design - Easy Installation Incorporates Anti-flail design feature Floating shaft coupling Back lash free High power to weight ratio High speed - high temperature 4 hub designs to accommodate large shafts Interchangeable with other brands	610 & 671		■			■	■	■

Note: Couplings are not regularly used in these versions. For specific requirement if any, Consult Rathi Transpower Pvt. Ltd.

RATHI® COUPLINGS: SELECTION CHART

STANDARD PUMPS - NON SPACER TYPE — 4 POLE / 1500 RPM

Motor Frame Size (50 Hz)	Shaft Size (mm)	Power		SERVICE FACTOR 1.0									SERVICE FACTOR 1.5								
				Elastomeric								Metallic	Elastomeric								Metallic
		KW	HP	L/SW	RFC(B)	RRJ	RB	RC	RN(B)	RBW	T/TO(B)	RGD/RGS	L/SW	RFC(B)	RRJ	RB	RC	RN(B)	RBW	T/TO(B)	RGD/RGS
D63	11	0.18	0.24	95	7	19	105-3	20	68	3	4	10	95	7	19	105-3	20	68	3	4	10
D71	14	0.37	0.50	95	7	19	105-3	20	68	3	4	10	95	7	19	105-3	20	68	3	4	10
D80	19	0.75	1.01	95	7	19	105-3	20	68	3	4	10	95	7	19	105-3	20	68	3	4	10
D90 S	24	1.10	1.47	95	7	24	105-3	30	68	4	4	10	95	7	24	105-3	30	68	4	4	10
D90 L	24	1.50	2.01	95	7	24	105-3	30	68	4	4	10	95	7	24	105-3	30	68	4	4	10
D100 L	28	3	4.02	95	7	28	105-3	30	80	5	4	10	95	7	28	105-3	30	80	5	4	10
D112 M	28	4	5.36	99	9	28	105-3	30	80	5	5	10	99	9	28	105-3	30	80	5	5	10
D132 S	38	5.50	7.37	110	9	38	116-4	38	95	7	5	10	110	9	38	116-4	38	95	7	5	10
D132 M	38	7.50	10.05	110	9	38	116-4	38	95	7	5	10	110	9	38	116-4	38	95	7	5	10
D160 M	42	11	14.75	110	11	42	125-4	42	95	7	6	10	110	11	42	125-4	42	95	7	6	10
D160 L	42	15	20.11	150	11	42	125-4	42	95	8	6	10	150	11	42	125-4	42	110	8	6	10
D180 M	48	18.50	24.80	150	11	48	144-6	48	110	8	7	10	150	11	48	144-6	48	125	8	7	10
D180 L	48	22	29.49	150	13	48	144-6	48	110	9	7	10	150	13	48	144-6	48	125	9	7	10
D200 L	55	30	40.21	190	13	55	162-6	58	125	9	8	15	190	13	55	162-6	58	140	9	8	15
D225 SC	60	37	49.60	225	15	65	162-6	70	140	10	8	15	225	15	65	162-6	70	140	10	8	15
D225 MC	60	45	60.32	226	15	65	162-6	70	140	10	8	15	226	15	65	162-6	70	160	10	8	15
D250 SC	70	55	73.73	276	15	75	178-6	70	180	11	9	20	276	15	75	178-6	70	180	11	9	20
D250 MC	70	78	104.56	276	18	75	178-6	70	180	11	9	20	276	18	75	178-6	70	180	11	9	20
D280 SC	80	90	120.64	280	18	90	198-10	85	200	12	10	20	280	18	90	198-10	85	200	12	10	20
D280 MC	80	110	147.45	280	18	90	198-10	85	200	12	10	20	280	18	90	198-10	85	200	12	10	20
D315 SC	85	132	176.94	295	23	90	228-11	85	200	13	11	25	295	23	90	228-11	85	200	13	11	25
D315 MC	85	150	201.07	295	23	90	228-11	85	200	13	12	25	295	23	90	228-11	85	225	13	12	25
D315 MB	85	185	247.99	295	23	90	228-11	85	200	13	12	25	295	23	90	228-11	85	225	13	12	25
D355/2	100	200	268.10	295	23	90	252-12	105	250	13	12	30	295	23	90	252-12	105	-	13	12	30
D400/2	110	250	335.12	350	28	90	285-11	120	-	-	14	30	350	28	90	285-11	120	-	-	14	30

STANDARD PUMPS - NON SPACER TYPE — 2 POLE / 3000 RPM

Motor Frame Size (50 Hz)	Shaft Size (mm)	Power		SERVICE FACTOR 1.0									SERVICE FACTOR 1.5								
				Elastomeric								Metallic	Elastomeric								Metallic
		KW	HP	L/SW	RFC(B)	RRJ	RB	RC	RN(B)	RBW	T/TO(B)	RGD/RGS	L/SW	RFC(B)	RRJ	RB	RC	RN(B)	RBW	T/TO(B)	RGD/RGS
D63	11	0.18	0.24	95	7	19	105-3	20	68	3	4	10	95	7	19	105-3	20	68	3	4	10
D71	14	0.37	0.50	95	7	19	105-3	20	68	3	4	10	95	7	19	105-3	20	68	3	4	10
D80	19	1.10	1.47	95	7	19	105-3	20	68	3	4	10	95	7	19	105-3	20	68	3	4	10
D90 S	24	1.50	2.01	95	7	24	105-3	30	68	4	4	10	95	7	24	105-3	30	68	4	4	10
D90 L	24	2.20	2.95	95	7	24	105-3	30	68	4	4	10	95	7	24	105-3	30	68	4	4	10
D100 L	28	3	4.02	95	7	28	105-3	30	80	5	4	10	95	7	28	105-3	30	80	5	4	10
D112 M	28	4.00	5.36	95	7	28	105-3	30	80	5	4	10	95	7	28	105-3	30	80	5	4	10
D132 S	38	7.50	10.05	110	9	38	116-4	38	95	7	5	10	110	9	38	116-4	38	95	7	5	10
D160 M	42	15	20.11	110	9	42	125-4	42	95	7	6	10	110	9	42	125-4	42	95	7	6	10
D160 L	42	18.50	24.80	110	9	42	125-4	42	95	7	6	10	110	9	42	125-4	42	95	7	6	10
D180 M	48	22	29.49	150	11	48	144-6	48	110	7	7	10	150	11	48	144-6	48	110	7	7	10
D200 L	55	37	49.60	190	11	55	162-6	58	125	9	8	15	190	11	55	162-6	58	125	9	8	15
D225 Ma	55	45	60.32	190	11	55	162-6	58	125	9	8	15	190	11	55	162-6	58	125	9	8	15
D250 Sa	60	55	73.73	190	13	65	162-6	-	140	9	8	15	190	13	65	162-6	-	140	9	8	15
D250 MA	60	78	104.56	225	13	65	162-6	-	140	10	8	15	225	13	65	162-6	-	140	10	8	15
D280 SA	65	90	120.64	226	15	65	178-6	-	160	10	9	15	226	15	65	178-6	-	160	10	9	15
D280 MA	65	110	147.45	276	15	65	178-6	-	160	11	9	15	276	15	65	178-6	-	180	11	9	15
D315 SA	65	132	176.94	276	15	65	178-6	-	160	11	9	15	276	15	65	178-6	-	180	11	9	15
D315 MA	65	185	247.99	280	15	65	178-6	-	160	12	-	15	280	15	65	178-6	-	200	12	-	15

RATHI® COUPLINGS: SELECTION CHART

STANDARD PUMPS - SPACER TYPE — 4 POLE / 1500 RPM

SERVICE FACTOR 1.0												
Motor Frame Size (50 Hz)	Shaft Size (mm)	Power		Elastomeric				Metallic				
		KW	HP	RRS/SWS	RCS	RNS(H)	RST	LM	EM	EMT	EMD	RSK
D63	11	0.18	0.24	95	20	80	16-5	5	4	82	40	13
D71	14	0.37	0.50	95	20	80	16-5	5	4	82	40	13
D80	19	0.75	1.01	95	20	80	16-5	5	4	82	40	13
D90 S	24	1.10	1.47	95	30	80	16-5	10	4	82	40	13
D90 L	24	1.50	2.01	95	30	80	16-5	10	4	82	40	13
D100 L	28	3	4.02	95	30	80	16-5	35	4	82	40	13
D112 M	28	4	5.36	95	30	80	16-5	35	4	82	40	13
D132 S	38	5.50	7.37	110	38	95	16-5	35	8	101	40	33
D132 M	38	7.50	10.05	110	38	95	16-5	95	8	101	40	33
D160 M	42	11	14.75	110	42	95	16-6	95	25	101	40	33
D160 L	42	15	20.11	150	42	95	16-6	95	25	101	40	33
D180 M	48	18.50	24.80	150	48	110	25-7F	95	25	127	40	75
D 180 L	48	22	29.49	150	48	110	25-7F	95	25	127	40	75
D200 L	55	30	40.21	225	58	125	25-7F	170	65	127	45	75
D225 SC	60	37	49.60	225	70	140	25-7F	170	65	127	45	75
D225 MC	60	45	60.32	276	70	140	25-7F	170	65	127	45	75
D250 SC	70	55	73.73	276	70	180	30-10F	170	65	127	180	135
D250 MC	70	78	104.56	280	70	180	30-10F	170	65	127	180	135
D280 SC	80	90	120.64	280	-	200	35-12F	220	125	-	-	135
D280 MC	80	110	147.45	280	-	200	35-12F	220	125	149	180	135
D315 SC	85	132	176.94	295	-	200	35-12F	400	125	149	310	230
D315 MC	85	150	201.07	295	-	200	35-12F	400	165	-	-	230
D315 MB	85	185	247.99	295	-	250	35-12F	400	165	149	310	230
D355/2	100	200	268.10	2955	-	250	-	400	165	100	500	350
D400/2	110	250	335.12	350	-	-	-	520	370	203	500	350

STANDARD PUMPS - SPACER TYPE — 2 POLE / 3000 RPM

SERVICE FACTOR 1.0												
Motor Frame Size (50 Hz)	Shaft Size (mm)	Power		Elastomeric				Metallic				
		KW	HP	RRS/SWS	RCS	RNS(H)	RST	LM	EM	EMT	EMD	RSK
D63	11	0.18	0.24	95	20	80	12-4	5	4	82	40	13
D71	14	0.37	0.50	95	20	80	12-4	5	4	82	40	13
D80	19	1.10	1.47	95	20	80	12-4	5	4	82	40	13
D90 S	24	1.50	2.01	95	30	80	12-4	10	4	82	40	13
D90 L	24	2.20	2.95	95	30	80	12-4	10	4	82	40	13
D100 L	28	3	4.02	95	30	80	12-4	35	4	82	40	13
D112 M	28	4	5.36	95	30	80	12-4	35	4	82	40	13
D132 S	38	7.50	10.05	110	38	95	16-5	35	4	101	40	33
D160 M	42	15	20.11	110	42	95	16-5	95	8	101	40	33
D160 L	42	18.50	24.80	110	42	95	16-5	95	8	101	40	33
D180 M	48	22	29.49	150	48	110	25-7F	95	8	127	40	75
D200 L	55	37	49.60	190	58	125	25-7F	95	25	127	45	75
D225 Ma	55	45	60.32	190	-	125	25-7F	170	25	127	45	75
D 250 Sa	60	55	73.73	190	-	140	25-7F	170	65	127	45	75
D250 MA	60	78	104.56	225	-	140	25-7F	170	65	127	45	75
D280 SA	65	90	120.64	226	-	160	30-10F	170	65	127	45	75
D280 MA	65	110	147.45	-	-	160	30-10F	170	65	127	45	75
D315 SA	65	132	176.94	-	-	160	30-10F	170	65	127	45	75
D315 MA	65	185	247.99	-	-	180	30-10F	170	125	127	180	75

Note:

- For Service Factor 1.5, refer page no. 8
- Standard spacer lengths (DIN Standard) : 100, 140, 180, 250 mm.
- Standard spacer lengths (ANSI Standard) : 3 ½", 5", 7".
- Non-standard spacer lengths available on request.
- Verify shaft length available for installation and select Hub type accordingly for LM, EM, EMT, EMD & RSK couplings.

RATHI® COUPLINGS: SELECTION CHART

API 610/671 PUMPS - SPACER TYPE — 4 POLE / 1500 RPM

SERVICE FACTOR 1.5												
Motor Frame Size (50 Hz)	Shaft Size (mm)	Power		Elastomeric				Metallic				
		KW	HP	RRS/SWS	RCS	RNS (H)	RST	LM	EM	EMT	EMD	RSK
D63	11	0.18	0.24	95	20	80	16-5	5	4	82	40	13
D71	14	0.37	0.50	95	20	80	16-5	5	4	82	40	13
D80	19	0.75	1.01	95	20	80	16-5	5	4	82	40	13
D90 S	24	1.10	1.47	95	30	80	16-5	10	4	82	40	13
D90 L	24	1.50	2.01	95	30	80	16-5	10	4	82	40	13
D100 L	28	3	4.02	95	30	80	16-5	35	4	82	40	13
D112 M	28	4	5.36	95	30	80	16-5	35	4	82	40	13
D132 S	38	5.50	7.37	99	38	95	16-5	35	4	101	40	33
D132 M	38	7.50	10.05	110	38	95	16-5	35	4	101	40	33
D160 M	42	11	14.75	110	42	95	16-6	95	8	101	40	33
D160 L	42	15	20.11	110	42	95	16-6	95	8	101	40	33
D180 M	48	18.50	24.80	150	48	110	25-7 F	95	25	127	40	75
D180 L	48	22	29.49	150	48	110	25-7 F	95	25	127	40	75
D200 L	55	30	40.21	190	58	125	25-7 F	170	25	127	45	75
D225 SC	60	37	49.60	225	70	140	25-7 F	170	25	127	45	75
D225 MC	60	45	60.32	276	70	140	25-8 F	170	65	127	45	75
D250 SC	70	55	73.73	276	70	180	30-10 F	170	65	127	180	135
D250 MC	70	78	104.56	276	70	180	30-10 F	170	65	127	180	135
D280 SC	80	90	120.64	280	-	200	35-12 F	220	65	149	180	135
D280 MC	80	110	147.45	280	-	200	35-12 F	220	65	149	180	135
D315 SC	85	132	176.94	295	-	200	35-12 F	400	125	149	310	230
D315 MC	85	150	201.07	295	-	200	35-12 F	400	125	149	310	230
D315 MB	85	185	247.99	295	-	200	35-12 F	400	125	149	310	230
D355/2	100	200	268.10	2955	-	250	-	400	125	176	500	350
D400/2	110	250	335.12	350	-	-	-	520	165	203	500	350

API 610/671 PUMPS - SPACER TYPE — 2 POLE / 3000 RPM

SERVICE FACTOR 1.5												
Motor Frame Size (50 Hz)	Shaft Size (mm)	Power		Elastomeric				Metallic				
		KW	HP	RRS/SWS	RCS	RNS(H)	RST	LM	EM	EMT	EMD	RSK
D63	11	0.18	0.24	95	20	80	12-4	5	4	82	40	13
D71	14	0.37	0.50	95	20	80	12-4	5	4	82	40	13
D80	19	1.10	1.47	95	20	80	12-4	5	4	82	40	13
D90 S	24	1.50	2.01	95	30	80	12-4	10	4	82	40	13
D90 L	24	2.20	2.95	95	30	80	12-4	10	4	82	40	13
D100 L	28	3	4.02	95	30	80	12-4	35	4	82	40	13
D112 M	28	4.00	5.36	95	30	80	12-4	35	4	82	40	13
D132 S	38	7.50	10.05	110	38	95	16-5	35	4	101	40	33
D160 M	42	15	20.11	110	42	95	16-5	95	4	101	40	33
D160 L	42	18.50	24.80	110	42	95	16-5	95	8	101	40	33
D180 M	48	22	29.49	150	48	110	25-7 F	95	8	127	40	75
D200 L	55	37	49.60	190	58	125	25-7 F	170	25	127	45	75
D225 Ma	55	45	60.32	190	58	125	25-7 F	170	25	127	45	75
D250 Sa	60	55	73.73	190	-	140	25-7 F	170	25	127	45	75
D250 MA	60	78	104.56	225	-	140	25-7 F	170	65	127	45	75
D280 SA	65	90	120.64	226	-	160	30-10 F	170	65	127	45	75
D280 MA	65	110	147.45	-	-	160	30-10 F	170	65	127	180	75
D315 SA	65	132	176.94	-	-	160	30-10 F	170	65	127	180	75
D315 MA	65	185	247.99	-	-	180	30-10 F	170	65	127	180	75

Note: Verify shaft length available for installation and select Hub type accordingly for LM, EM, EMT, EMD & RSK couplings.

COUPLINGS: FBKW DIMENSIONS & TOLERANCES FOR STANDARD SHAFTS

METRIC BORE & KEYWAYS : IS:2048-1983 / BS 4235-1:1972

(Dimensions comply with DIN 6885/1)

SR. NO.	BORE SIZE (A) H7		KEYWAY WIDTH (B) Js9		KEYWAY DEPTH (C) Js9		SET SCREW SIZE
1	11	+0.018 -0.000	4	±0.015	12.8	+0.1 -0.0	M5 X 0.8P
2	14		5		16.3		
3	19	+0.021 -0.000	6	±0.018	21.8	+0.2 -0.0	M6 X 1P
4	24		8	±0.022	27.3		
5	28		8		31.3		
6	34	+0.025 -0.000	10		37.3		M10 X 1.5P
7	38		10		41.3		
8	42		12		45.3		
9	48		14	±0.027	51.8		M12 X 1.75P
10	55	+0.030 -0.000	16		59.3		
11	60		18		64.4		
12	65		18		69.4		
13	75		20	±0.033	74.9		
14	80		22		85.4		M16 X 2P
15	85	+0.035 -0.000	22		90.4		
16	100		28		106.4		
17	110		28		116.4		M20 X 2.5P

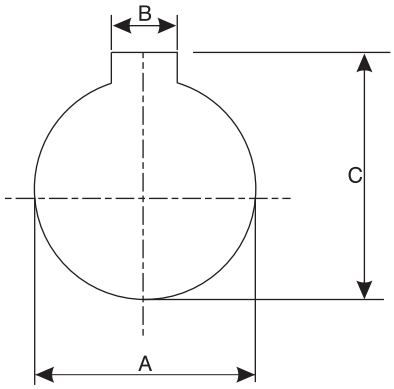

IMPERIAL BORE & KEYWAYS : BS 46-1:1958

(Dimensions comply with DIN 6885/1)

SR. NO.	BORE SIZE (A) H7		KEYWAY WIDTH (B)		KEYWAY DEPTH (C)		SET SCREW SIZE
1	7/16”	+0.0007” -0.0000	1/8”	+0.006” -0.000	1/2”	+0.001” -0.000	M5 X 0.8P
2	9/16”		3/16”		21/32”		
3	3/4”		3/16”		27/32”		
4	15/16”	+0.0008” -0.0000	1/4”		1 1/16”		
5	1 1/8”		5/16”		1 5/16”		M6 X 1P
6	1 5/16”	+0.001” -0.000	3/8”		1 27/64”		
7	1 1/2”		3/8”		1 39/64”		
8	1 11/16”		7/16”		1 13/16”		M10 X 1.5P
9	1 7/8”		1/2”		2”		
10	2 3/16”	+0.0012” -0.0000	5/8”		2 3/8”		
11	2 3/8”		5/8”		2 9/16”		
12	2 9/16”		3/4”		2 49/64”		M16 X 2P
13	2 15/16”		3/4”		3 9/16”		
14	3 1/8”		7/8”		3 25/64”		
15	3 3/8”	+0.0014” -0.0000	7/8”		3 41/64”		
16	3 15/16”		1”		4 1/4”		
17	4 5/16”		1 1/4”		4 43/64”		M20 X 2.5P

RATHI OTHER : COUPLINGS & ACCESSORIES

For details visit at www.rathicouplings.com

Non- Spacer

Spacer

SAE Flange Couplings

Muff Couplings

RPG

RLPGT

Polygear Couplings

Cardon Shaft Couplings

SAE Stub Shafts

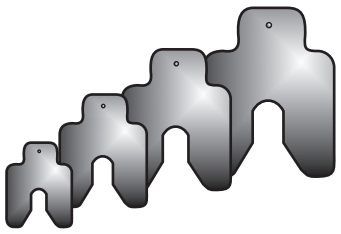

Precut Alignment Shims

Composite Floating Shaft Couplings

POLYBOND ANTI-VIBRATION MOUNTINGS

For details visit at www.polybondindia.com

(Applications - Pumps, Separator, Decanters, Compressors, Centrifugal Equipments, Small high speed Diesel Engines, etc.)

P-Mounts

Spring Mountings

Combi Mounts Type PC

PAM Mounts

Sandwich Mounts

'O' Mounts

Double U Shear Mounts

Seismic Mounts

RATHI COUPLINGS : SATISFIED CUSTOMERS AROUND THE WORLD - PROOF OF OUR EXCELLENT QUALITY

SHOCK TEST AT WEIR UK

After approaching Weir UK it was agreed that a trial of our Metallic Disc Coupling would be tested on a test rig at Weir Pumps, Alloa. A positive report followed from Weir. Two AM165 couplings were fitted between a 300 kW Motor, Torque Meter and a Pump, whilst running at 2,000 RPM. A bearing failure caused the Pump to seize. The couplings withstood this excessive shock load without a blemish, after replacing the bearings the couplings remained intact and are still operating.

MAJOR COUPLING SUPPLY CONTRACT WITH FLOWSERVE

Flowserve Pumps, Newark was our first major conquest, in 1994. We carried out a major project with them to rationalise their supplier base and improve their costs of bought in Flexible Couplings. We did this by proving the quality of our product and satisfying every coupling requirement for all their different pump sets. No other supplier could do this. We are now their major source for flexible couplings, on one of their major product ranges, previously purchased from 14 different suppliers.

KSB Ajax Pumps, Australia.
"We have been using **RATHI** Type RRS x SWS Spacer Couplings, since the last thirteen years. We consider that the decision to change to **RATHI** has proved to be the right one. Since using **RATHI** couplings, the field problems are almost zero. Our pumpset costs have also reduced considerably.
Quite frankly, we find this supplier to be excellent one".

AND OTHERS

RNE Pump – South Africa.

"RATHI Couplings are a perfect fit with our heavy hard pumps in the Gold Mines."

Wernert Pump – Germany.

"We are happy to change over to RATHI"

Absray, Kelair, Southern Cross, Regent, – Australia.

"Best served couplings for last 15 years"

Plenty Mirrlees Pumps – UK

"RATHI Couplings added quality to our Pump"

Global Pump Company – USA

"We have been using Rathi products with great success and our business is growing."

Happy customers since many decades -

Kirloskar, Ebara, Sulzer, KSB, WPIL, Jhonson, SPP, BHEL – India, Mather & Platt

... and many more

DISTRIBUTION THROUGHOUT THE WORLD

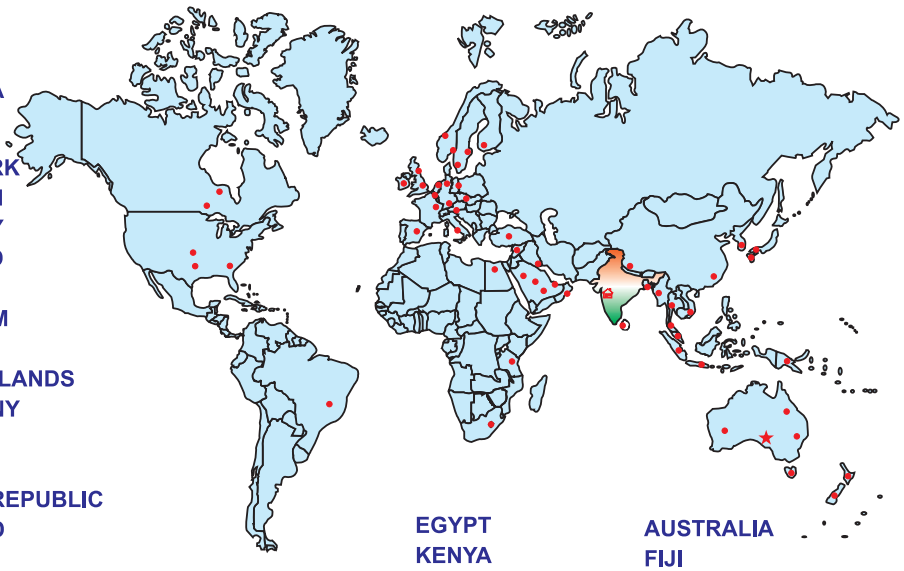

U.S.A
CANADA
BRAZIL

DENMARK
SWEDEN
NORWAY
FINLAND
UK
BELGIUM
FRANCE
NETHERLANDS
GERMANY
ITALY
SPAIN
CZECH REPUBLIC
IRELAND

EGYPT
KENYA
KUWAIT
SAUDI ARABIA
SOUTH AFRICA

AUSTRALIA
FIJI
NEW ZEALAND
PAPUA NEW GUINEA

SINGAPORE
TAIWAN
MALAYSIA
HONG KONG
INDONESIA
CHINA
SOUTH KOREA
THAILAND
BANGLADESH
NEPAL
SRI LANKA
SYRIA
U.A.E.
QATAR
OMAN
TURKEY

HOME
BRANCH

COMPATIBILITY WITH OTHER LEADING BRANDS

RATHI	TYPE	EQUIVALENT
JAW - FLEX	L / SW / RRS / H	Lovejoy® - Jaw L / SW / RRS / H
		Fenner® - Essex®
		Martin - Jaw / Browning® / Maska - Star Flex®
	RRJ	KTR-Rotex®
	RFC	Fenner® - HRC®
	N-Flex-RN-RNS- A / B / H	Flender - N-Eupex® A / B / H
TYRE - FLEX	T / TO	Fenner® - Fenaflex® Dodge - Para-Flex® Martin - Martin-Flex®
CONE FLEX / B-FLEX	RC / RCT RB	David Brown - Cone Ring® MC / MCT Flender - Rupex®
METALLIC	Disco-o-Flex LM / EM /RSK	Bibby Turboflex UK / John Crane Flexibox®-Metastream®(TSK)
GEAR	RGD / RGS	AGMA Std
GRID	RGT	Falk® / Bibby®
POLY GEAR	RPG RLPGT	KTR - Bowex® David Brown® - GT
RIGID COUPLING	RRM	Fenner® - RM
	RR-RRT	David Brown® - MR-MRT
SLEEVE FLEX	RBW	TB Wood's Sure-Flex® / Lovejoy®

Note :- ® Registered Trademark of various Companies

Note :-

- All dimensions are in mm unless otherwise specified.
- In view of our constant endeavour to improve quality of our products, we reserve the right to alter or change specifications without prior notice.
- This document is the intellectual property of Rathi Transpower Pvt. Ltd. and subject to copyright.

ISO 9001 BUREAU VERITAS Certification — UKAS QUALITY MANAGEMENT 008

Rathi Transpower Pvt Ltd
Rathi Chambers, 7, Deccan College Road,
Pune 411 006.
Phone : 91-20-30517201
Fax : 91-20-30517212
E-mail : enquiry@rathigroup.com
Website : www.rathicouplings.com