RATH Europe

ELASTOMERIC COUPLINGS

POWER TRANSMISSION PRODUCTS

www.rathicouplings.com

INTRODUCTION

RATHI® Europe

A COMPANY WITH PEDIGREE RATHI HAS BEEN A MARKET LEADER IN MECHANICAL POWER TRANSMISSION PRODUCT AND ENGINEERING SOLUTIONS FOR ROTATING EQUIPMENT FOR OVER 45 YEARS

WHY RATHI ?.....

When you buy a RATHI Product you also receive.....

1) ***Impartial choice*** - Wide range of elastomeric, metallic with & without lubrication couplings are available to suit your application needs.
2) ***Proven Service Excellence*** - 45 years experience in the design, manufacturing, application engineering and servicing of shaft coupling.
3) ***Ready to Install Product*** - Factory finish bored, broached keyway coupling as per international standards.
4) ***Network*** :- Zonal representatives, distributors, dealers, stockists all supported by an extensive application engineering department to offer you service and engineered products.
5) ***Protection*** :In-house black phosphating surface treatment gives protection against corrosion.
6) ***Rubber Technology :*** RATHI are probably the only manufacturer, to produce the rubber elements which go into their couplings, in-house.

RATHI® COUPLINGS :

You've made the right choice, when you choose Rathi. The leading source for flexible Jaw Couplings. Rathi offers you much more – the widest range of power transmission products under one roof. From the smallest to the largest, be it jaw, gear, grid, disc or other special couplings. When it comes to size and selection you'll find them all in our range.

For more than 45 years, Rathi has been supplying Power Transmission Products to a World wide market. We follow world quality standards in our manufacturing. Rathi's uncompromising dedication to the interests of it's global customer base has earned Rathi an International reputation for Engineering Integrity, Production Superiority, and Service Responsibility and has brought the coveted ISO 9001 Certification for manufacturing quality. Today, Rathi products are found all over the world.

YOU NAME THE TYPE OF PUMP & COMPRESSOR, WE HAVE A COUPLING FOR IT

Water Pumps, Slurry Pumps, Sewage Pumps, Submersible Pumps, Back Pull out Pumps, Multistage Pumps, Split Case Pumps, API Pumps, Chemical Process Pumps, Hydraulic Pumps, Metering/Dosing Pumps, Gear Pumps, Paper Stock Pumps, Screw Pumps, Mono Pumps, Vacuum Pumps, Fire Pumps, High Pressure Pumps, Stationary Screw Compressors, Piston Compressors, Turbo Compressors and many more....

ISO 9001:2015

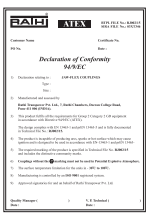

ATEX Certification

CUTR Certification

Selection Procedure

Refer Page No. 11 for RRJ & Page No. 19 for T/TO

RATH® Europe

(a) Service Factor
Determine appropriate SERVICE FACTOR from table A.

(b) Design Power
Multiply running power of driven machinery by the service factor. This gives DESIGN POWER which is used as a basis for coupling selection.

(c) Coupling Size
Refer respective table for your required coupling type and read from the appropriate speed column until a power equal to or greater than the DESIGN POWER is found.

(d) Bore Size
Refer respective coupling 'TECHNICAL DATA' table to check that the required bores can be accommodated.

EXAMPLE
A coupling is required to transmit 5 kW from an electric motor which runs at 100 rpm to a centrifugal pump for 12 hours a day. The motor shaft diameter is 60 mm. and the pump shaft diameter is 55 mm.

Select SW Type Coupling

(a) Service Factor
From Table A the service factor is 1.0

(b) Design Power
Design Power 5 x 1.0 = 5 kW

(c) Coupling Size
Read from 100 rpm in the speed column of 'TECHNICAL DATA' table. The first power to exceed the DESIGN POWER of 5 kW is 5.6 kW. The size of the coupling specified in the first column corresponding to 5.6 kW is SW-276 for Synthetic Rubber.

(d) Bore Size
Max. Bore for coupling size SW-276 is 75 mm. This shows that both the shaft diameters are within the range.

A. SERVICE FACTORS

SPECIAL CLASSES For applications where substantial shock, vibration and torque fluctuations occur and for reciprocating machines e.g. internal combustion engines, piston pumps and compressors, refer to Rathi Transpower with full machine details	Type of Driving Unit					
	Electric Motors			Internal Combustion Engines Steam Engines Water Turbines		
	Hours per day duty			Hours per day duty		
Driven Machine Class	8 and under	over 8 to 16 inclusive	over 16	8 and under	over 8 to 16 inclusive	over 16
UNIFORM Agitators, Brewing machinery, Centrifugal Blowers, Conveyors, Centrifugal Fans and Pumps, Generators, Sewage disposal Equipments.Evaporators, Feeders, Textile machines, Wood working machines.	1.00	1.00	1.00	1.00	1.10	1.10
MODERATE SHOCK* Clay working machinery, Crane Hoists, Laundry machinery, Machine Tools, Rotary Mills, Paper Mill machinery, Non-uniformly loaded centrifugal pumps, Rotary Screens, Centrifugal Compressors.Shredders, Printing presses, Oil industry, Mixers, Food industry, Beaters, Bucket elevators, Gear pumps, Wood working machinery, Textile machinery	1.10	1.10	1.20	1.20	1.25	1.25
HEAVY SHOCK* Reciprocating Conveyors, Crushers, Shakers, Metal Mills, Rubber machinery (Banbury Mixers and Mills) Reciprocating Compressors, Welding Sets, Freight & passenger elevators, Cooling tower fans, Hammer mills, Reciprocating pumps, Vibrating screens, Winches, Wire drawing machines.	1.25	1.40	1.60	1.60	1.80	2.00

* It is recommended that keys with top clearance are fitted for applications where load fluctuation is expected.

SNAP WRAP COUPLINGS
TYPE L / SW / RRS

RATH® Europe

... the coupling that pays for itself

Type L Coupling

Type TSW Coupling

Type RRS Spacer Coupling

Spider
Synthetic Rubber,
Polyurethane, H-Trans

SW Spider
Synthetic Rubber,
Polyurethane, H-Trans

SW Element
(Nitrile / Urathane / H-Trans)

6 ways the "Snap Wrap" coupling can help pay for itself:

With its unique wrap around Synthetic rubber connecting element, the Snap Wrap coupling eliminates the need for dismantling the connected equipment while inspecting or replacing the element - a major benefit when down-time on machinery can run into huge amounts.

Combined with a range of prebored hubs, a modular hub design and a spacer option, the Snap Wrap coupling is unsurpassed for quality, flexibility, speed of installation and maintenance.

1. **Prebored hubs**
   Hubs bored and keyed to standard IEC motor shaft sizes at no extra cost.
2. **Snap Wrap element**
   Ease of inspection and replacement within 5 minutes.
3. **Modular hub design**
   Both Models , SW & RRS use the same hubs.
4. **Spacer coupling**
   RRS spacer model is available for pump applications.
5. **Fully machined hubs**
   Balance, ease of alignment and smooth contact surface for elements are assured.
6. **Any environment**
   Water, oil, greases & dust do not affect performance.

SNAP WRAP COUPLINGS
TYPE L / SW / RRS

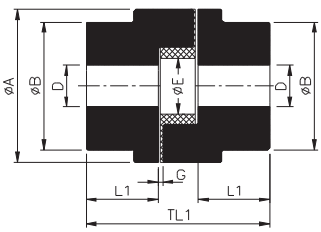

TYPE L

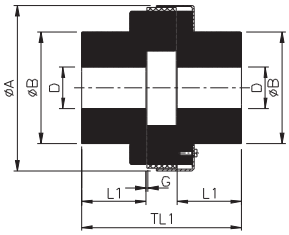

TYPE SW

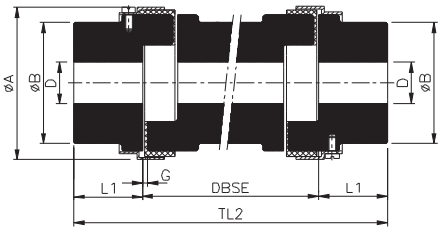

TYPE RRS

TECHNICAL DATA

Coupling		Power Rating						Pilot Drill Size	Max. Bore D	ØA		Length thru' Bore L1	ØB	Gap G	ØE	DBSE	TL1	TL2
		Synthetic Rubber		Polyurethane		H-Trans												
Type	Size	Rated Torque (Nm)	kW@ 100 rpm	Rated Torque (Nm)	kW@ 100 rpm	Rated Torque (Nm)	kW@ 100 rpm			SW/ RRS	L							
L	35	0.38	0.004	0.6	0.01	1.0	0.01	-	10	-	16	6.5	16	1	-	-	21	-
	50	2.80	0.03	4.2	0.04	7.0	0.07	-	16	-	27	15	27	1	-	-	42	-
	70	4.90	0.05	7.4	0.08	12.3	0.13	-	20	-	35	19	35	2	-	-	51	-
	⊙ 75	9.80	0.1	14.7	0.15	24.5	0.26	-	22	-	45	21	45	2	-	-	55	-
	■ 75	9.80	0.1	14.7	0.15	24.5	0.26	-	22	-	45	21	39	2	-	-	55	-
L SW RRS	95	21.10	0.22	31.7	0.33	52.8	0.55	-	28	65	54	25	49	2	19	90,100,140	63	TL2 = DBSE + 2L1
	99	46.40	0.49	69.6	0.73	116	1.2	-	30	78	65	27	51	2	27		72	
	100	46.40	0.49	69.6	0.73	116	1.2	-	35	78	65	35	57	2	27		88	
	110	89	0.93	133.5	1.4	222.5	2.3	-	42	96	85	43	76	3	35	90	108	
	150	141	1.5	211.5	2.2	352.5	3.7	-	48	111	96	45	80	3	35	100	115	
	190	190	2.0	285	3.0	475	5.0	-	60	129	115	54	102	3	45	140	133	
	225	265	2.8	397.5	4.2	662.5	6.9	-	65	142	127	64	111	3	45	180	153	
	226	327	3.4	490.5	5.1	817.5	8.6	25	70	153	137	70	119	3	51		178	
L SW	276	532	5.6	798	8.4	1330	13.9	25	75	173	157	80	127	3	60	-	200	-
	280	782	8.2	1173	12.3	1955	20.5	30	80	208	192	80	140	3	70	-	200	-
	295	1279	13.4	1918.5	20.1	3197.5	33.5	30	95	253	237	95	162	3	80	-	238	-
	2955	2132	22.3	3198	33.5	5330	55.8	30	105	253	237	108	180	3	80	-	264	-
SW	300	3047	31.9	4570.5	47.9	7617.5	79.8	30	105	272	-	115	180	3	-	-	283	-
	350	4308	45.1	6462	67.7	10770	112.8	30	115	323	-	128	200	3	-	-	309	-

All dimensions are in mm.
For vertical installation contact RATHI.
For RRS/SW maintain gap 'G' at the time of assembly.
Maximum bores can be increased in case of steel hubs. Consult manufacturer

Material : Sintered iron for sizes 035 to 075
Aluminum for sizes 050 to 110 & for all RRS spacers.
Cast Iron for sizes 095 to 350.

■ 075 - Aluminium
⊙ 075 - Sintered Iron
For RRS, TL2 = DBSE + 2L 1

L Type Spider : Polyurethane - for Sizes 50 to 295
H-Trans - for Sizes 50 to 225

JAW-FLEX COUPLINGS
TYPE SWS

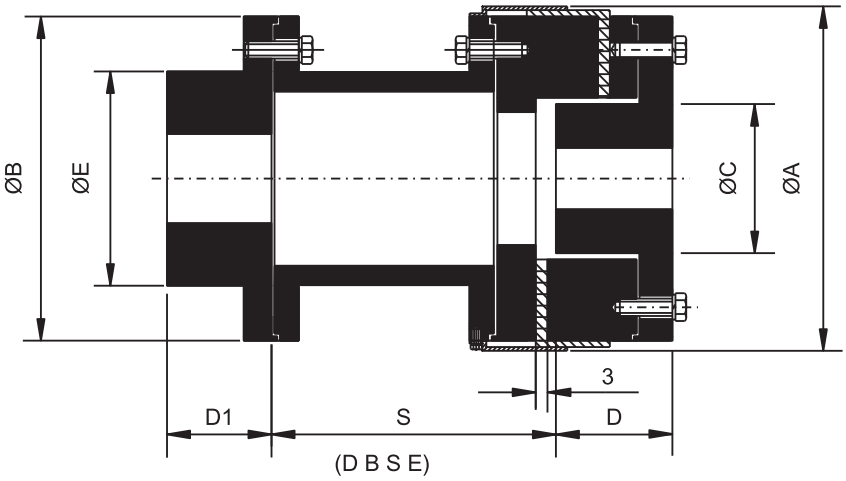

MOTOR SIDE PUMP SIDE

TYPE SWS

SWS TECHNICAL DATA

Coupling Size	Power Rating						Motor Side Bore		Pump Side Bore		O.D.		Hub Dia.		Length thru' Bore	
	Synthetic Rubber		Polyurethane		H-Trans											
	Rated Torque (Nm)	kW@ 100 rpm	Rated Torque (Nm)	kW@ 100 rpm	Rated Torque (Nm)	kW@ 100 rpm	Min.	Max.	Min.	Max.	ØA	ØB	ØC	ØE	D	D1
SWS 276	535	5.6	802	8.4	1337	14	25	75	24	42	173	154	70	130	60	60
SWS 280	783	8.2	1175	12.3	1958	20.5	30	80	28	55	208	189	90	130	65	60
SWS 295	1280	13.4	1920	20.1	3199	33.5	30	95	28	65	253	234	106	160	80	70
SWS 2955	2139	22.4	3209	33.6	5348	56	30	105	28	70	253	234	106	160	80	75
SWS 300	3046	31.9	4570	47.9	7616	79.75	30	105	28	75	272	251	122	180	88	80
SWS 350	4298	45.0	6446	67.5	10744	112.5	30	115	30	80	323	302	130	200	90	90

Note : Std. Spacer length 140, 180mm available. Non std. Spacer available on request.

SPIDER / SW ELEMENT MATERIAL

Codes	Materials	Features	Properties		
			Colour	Hardness	Temperature
N	Synthetic Rubber	Synthetic Rubber, a highly flexible insert material that is oil resistant, is our standard elastomer. It resembles natural rubber in resilience and elasticity.	Black	80 SHA	-40°C to 100°C
U	Polyurethane	Urethane has greater torque capability than Synthetic Rubber and offers good resistance to oil and chemicals. However, this material provides less dampening effect.	Orange	90 SHA	-34°C to 71°C
H	H-Trans	H-Trans is a flexible elastomer designed for high torque and high temperature operations. Has an excellent Resistance to oil and chemicals. It is best used in continuous load applications rather than cyclic or on/off service.	Natural White	98 SHA	-51°C to 121°C

JAW FLEX COUPLINGS
TYPE H / HR

RATHI® Europe

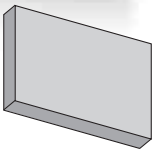

Load Cushion - (Nitrile / Urathane / H - Trans for H,HR)

Special Features
Individual free floating load cushions held in place by outside steel collar.
Completely machined castings.
Easy to assemble & disassemble.
Cushions easily inspected at all times.
Material of construction -
C.I. for Size 307 to 367
S.G. Iron Size 407 to 1015

Applications
For pumps in chemical industry, ideal for reciprocating pumps, diesel or gas engines, multiple generator sets and such heavy duty applications.

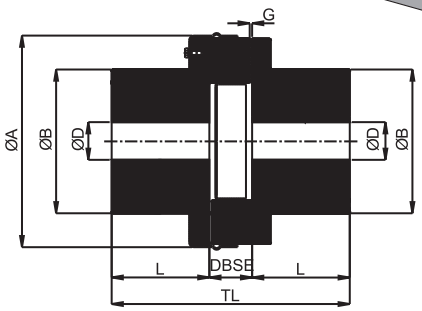

TYPE H

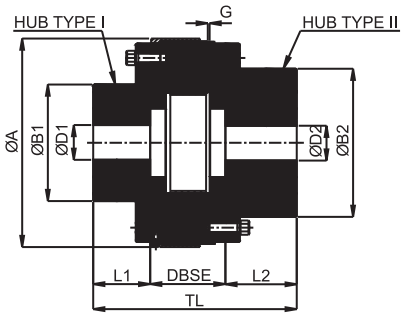

TYPE HR

'H' TECHNICAL DATA

Size	kW at 100 rpm			Gap G	Bore (ØD)		Outside Dia. ØA	Hub Dia. ØB	Length thru' Bore L	DBSE	Overall Length TL	Approx. weight in kg	
	Synthetic Rubber	PU	H-Trans		Min.	Max.						Min. Bore	Max. Bore
H-307	56	84	140	3	60	105	262	180	121	53	295	58	55
H-357	75	112	187	3	60	115	288	197	127	60	314	73	67
H-367	104	156	260	3	70	130	313	222	143	67	353	105	99

'HR' TECHNICAL DATA

Size	KW at 100 rpm			Gap G	Type I Bore (ØD1)		Type II Bore (ØD2)		Outside Dia. ØA	Hub Diameter		Length thru Bore		DBSE	Overall Length TL
	Synthetic Rubber	PU	H-Trans		Min.	Max.	Min.	Max.		ØB1	ØB2	L1	L2		
HR-307	56	84	140	3	30	80	60	105	266	131	170	68	85	100	253
HR-357	75	112	187	3	35	85	60	115	292	138	180	76	95	110	281
HR-367	104	156	260	3	40	100	70	130	317	162	210	84	105	117	306
HR-407	-	223	372	3	50	120	85	155	349	195	248	95	120	126	341
HR-457	-	302	502	3	60	140	85	185	400	220	294	100	130	134	364
HR-509	-	358	597	6	70	145	90	190	412	230	305	110	140	133	383
HR-609	-	527	877	6	85	170	100	225	461	275	360	130	170	142	442
HR-709	-	738	1230	6	90	190	100	265	524	300	425	140	195	162	497
HR-809	-	-	1530	6	100	215	120	295	592	345	470	155	210	196	561
HR-911	-	-	1770	6	100	265	170	340	661	420	545	190	240	216	646
HR-1013	-	-	2644	6	195	360	-	-	800	540	-	340	-	218	-
HR-1015	-	-	3665	6	215	420	-	-	910	630	-	340	-	235	-

- Maintain Gap 'G' = at the time of assembly.
- Please specify hub type required.
- Non std. DBSE spacer available on request.
- For vertical installation contact RATHI.

N-FLEX RN COUPLINGS
TYPE RN / RNS

Rathi N-Flex couplings consists of graded cast iron hubs and a set of 'H' shaped highly resilient blocks which accommodates parallel, angular and axial misalignments & absorbs torsional vibrations. Rathi N-Flex spacer couplings (Type - RNS) are suitable for 'Back Pull out Pumps' in which the impeller can be disassembled without disturbing motor and pump from the base frame.

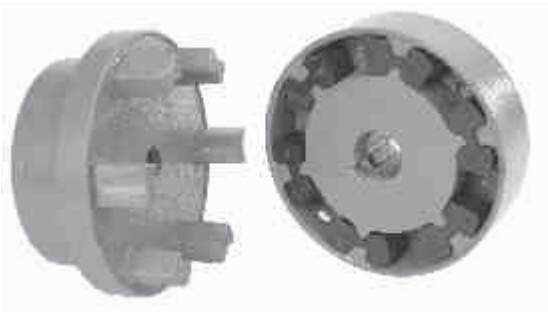

RN (B)

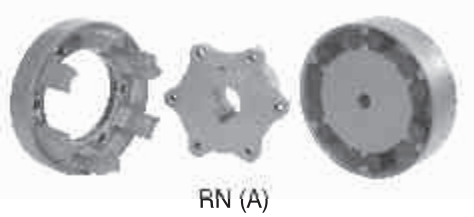

RN (A)

H Insert
(Nitrile / PU / H-Trans)

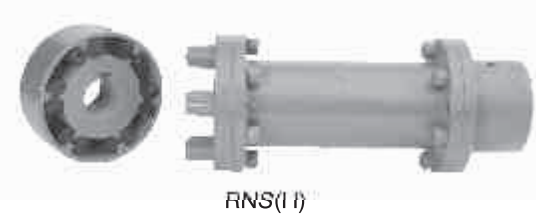

RNS(LI)

F E A T U R E S

Simplicity Of Construction

Easy to assemble & disassemble.
Suitable for reversing operation.

Varying Stiffness Characteristics

Special H shaped inserts provide progressively increasing stiffness characteristics, hence ensure effective shocks & vibration absorption. Special elastomer can be supplied to suit specific application needs.

No Lubrication

RN/RNS couplings do not require lubrication of any kind.

Simple / Easy Maintenance

No complicated mechanism to demand adjustment or maintenance. Inspection and replacement of inserts is easy.

Low Operational Cost

Only wear part is low cost inserts which make coupling economical in long run.

Smooth & Quiet Operation

Reduces vibration & noise arising from severe torque fluctuations. Operating temp. is -30^{0}C to +100^{0}C.

Application :

Mainly for pump applications such as :

Water Pumps, Slurry Pumps, Sewage Pumps, Back Pull out Pumps, Multistage Pumps, Spilt Case Pumps, API Pumps, Chemical Process Pumps, Metering/Dosing Pumps, Gear Pumps, Paper Stock Pumps, Screw Pumps, Vacuum Pumps, Fire Pumps, High Pressure Pumps.

N-FLEX RN COUPLINGS

TYPE RN / RNS

RATHI® Europe

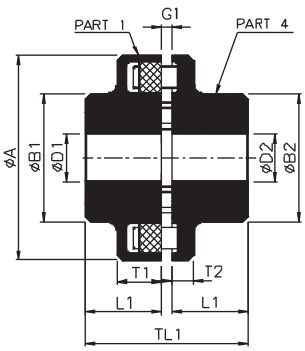

RN(B)

SIZES - 68 TO 250

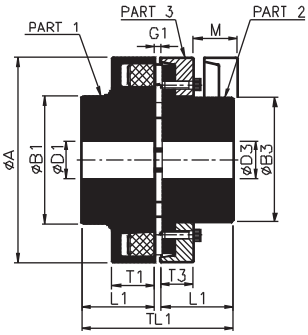

RN(A)

SIZES - 110 TO 250

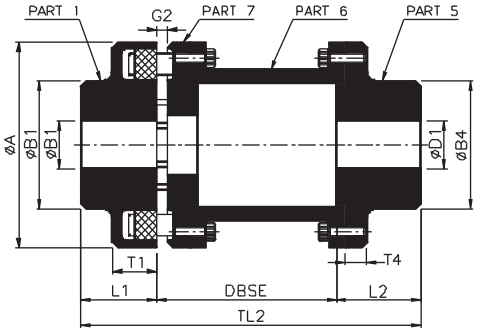

RNS(H)

SIZES - 80 TO 250

SIZE	RATED TORQUE Nm.	KW @ 100 RPM	RATED TORQUE Nm.	KW @ 100 RPM	RATED TORQUE Nm.	KW @ 100 RPM	MAX. SPEED (RPM)	MAX. BORE (mm)			DIMENSIONS (mm)														WEIGHT Kg			M.I. (WR²) Kg-m²		
	Synthetic Rubber		Polyurethane		H-Trans			D1	D2	D3	ØA	ØB1	ØB2	ØB3	ØB4	L1	L2	T1	T2	T3	T4	M	DBSE	RN(B)	RN(A)	RNS(H)	RN(B)	RN(A)	RNS(H)
68 B	34	0.36	51	0.54	85	0.9	7000	24	28	-	68	68	45	-	-	20	-	21	8	-	-	-	-	0.54	-	-	0.0002	-	-
80 B, H	60	0.63	90	0.95	150	1.6	6000	30*	38	-	80	68	68	-	55	30	45	31	10	-	7	-	100 140	1.3	-	2.6 2.7	0.0006	-	0.001 0.001
95 B,H	100	1.1	150	1.65	250	2.8	5500	42	42	-	95	76	76	-	70	35	45	30	12	-	9	-	100 140	2.2	-	3.5 3.8	0.0013	-	0.003 0.003
110 A,B,H	160	1.7	240	2.55	400	4.3	5300	48	48	38	110	86	86	62	85	40	50	34	14	20	11	33	100 140 180	3.3	3	5.2 5.4 6.0	0.0030	0.003	0.005 0.006 0.006
125 A,B,H	240	2.5	360	3.75	600	6.3	5100	55	55	45	125	100	100	75	90	50	50	36	18	23	11	38	100 140 180	5.2	4.8	7.2 7.7 8.2	0.0060	0.005	0.010 0.010 0.011
140 A,B,H	360	3.8	540	5.70	900	9.5	4900	60	60	50	140	100	100	82	100	55	65	34	20	28	15	43	100 140 180	5.6	6	10.0 10.5 11.0	0.0070	0.0080	0.018 0.019 0.020
160 A,B,H	560	5.9	840	8.85	1400	14.8	4250	65	65	58	160	108	108	95	108	60	70	39	20	28	15	47	100 140 180	7.8	8.4	13.0 13.7 14.5	0.0100	0.0140	0.030 0.032 0.034
180 A,B,H	880	9.2	1320	13.80	2200	23.0	3800	75	75	65	180	125	125	108	125	70	80	42	20	30	15	50	140 180	11.5	12	18.5 19.4	0.0200	0.025	0.054 0.058
200 A,B,H	1340	14	2010	21.00	3350	35.0	3400	85	85	75	200	140	140	122	140	80	90	47	24	32	18	53	140 180 200 250	16	17	25.6 26.5 27.2 28.5	0.0400	0.040	0.095 0.100 0.105 0.110
225 A,B,H	2000	21	3000	31.50	5000	52.5	3000	90	90	85	225	150	150	138	150	90	100	52	18	38	18	61	140 180 200 250	20	23	34.0 35.0 36.0 38.0	0.0700	0.080	0.158 0.160 0.170 0.180
250 A,B,H	2800	29	4200	43.50	7000	72.5	2750	100	100	95	250	165	165	155	165	100	110	60	18	42	21	69	180 200 250	29	31	48.0 50.0 52.0	0.1200	0.130	0.270 0.280 0.300

- All dimensions are in mm.
- * = Bore 32 mm for part 5.
- G1 = 2-4mm for sizes 68 to 140, 2-6 mm for sizes 160 to 225 & 3-8 mm for size 250.
- G2 = 5 mm for sizes 80 to 140, 6 mm for sizes 160 to 225 & 8 mm for size 250.
- Part No. 5 is available with different length through Bores L2.
- Max. bore for coupling with or equivalent to DIN 6885 keys.
- For vertical installation contact RATHI.
- Weight & Inertia at Max Bore.

CURVE-FLEX COUPLINGS
TYPE RRJ

RATHI® Europe

- Allover machining - Inherently balanced
- No Lubrication, Maintenance free - Long life
- Compact design, High power to weight ratio
- Fail safe - Will perform even if spider fails
- Vibrations Damping, torsionally flexible
- Axial plug-in, easy to assemble

RRJ Coupling

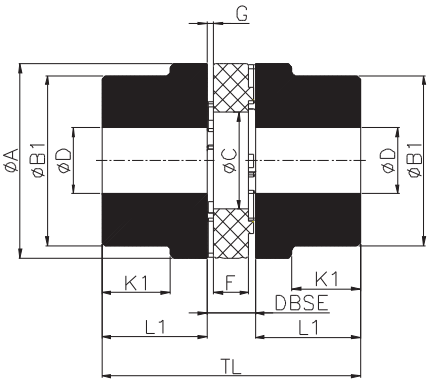

HUB TYPE I

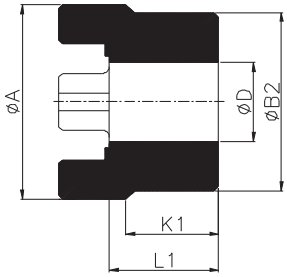

HUB TYPE II

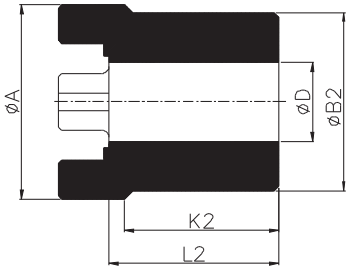

HUB TYPE III

TECHNICAL DATA

RRJ - ALUMINIMUM (AL)*

Coupling Size	Hub Type	kW @ 100 rpm Red	kW @ 100 rpm Yellow	Torque Nm Red	Max. Speed RPM	Bore - Ø D PB	Bore - Ø D Min.	Bore - Ø D Max.	DIMENSIONS (mm) ØA	ØB1	ØB2	ØC	DBSE min.	F	L1	L2	G	TL	K1	K2	# Assembly Weight (Kg.)	M.I. (Kg.m²)
19	I	0.18	0.1	18	14000	0	6	19	41	32	-	18	16	12	25	-	2	66	20	-	0.11	2.3×10^{-5}
	II						19	24		-	41										0.14	4.3×10^{-5}
24	I	0.65	0.35	62	10600		9	28	56	40	-	27	18	14	30	-	2	78	24	-	0.24	9×10^{-5}
	II						22			-	56										0.34	19×10^{-5}
28	I	1.75	0.95	167	8500		10	38	66	48	-	30	20	15	35	-	2.5	90	28	-	0.39	20×10^{-5}
	II						28			-	66										0.54	42×10^{-5}
RRJ- CAST IRON (CI)*																						
38	I	3.47	1.9	332	7100	10	12	40	80	66	-	38	24	18	45	-	3	114	37	-	2.00	1.85×10^{-3}
	II							48		-	78										2.40	2.45×10^{-3}
	III														-	70		164	-	62	3.60	3.72×10^{-3}
42	I	4.99	2.65	477	6000	12	14	45	95	75	-	46	26	20	50	-	3	126	40	-	3.20	4.1×10^{-3}
	II							55		-	94										3.80	5.9×10^{-3}
	III														-	75		176	-	65	5.50	8.54×10^{-3}
48	I	5.49	3.1	524	5600	13	15	52	105	85	-	51	28	21	56	-	3.5	140	45	-	4.96	7.4×10^{-3}
	II							62		-	104										5.45	9.9×10^{-3}
	III														-	80		188	-	69	7.51	13.6×10^{-3}
55	I	7.27	4.1	694	4750	18	20	60	120	98	-	60	30	22	65	-	4	160	52	-	6.60	12.3×10^{-3}
	II							74		-	118										7.50	17.3×10^{-3}
	III														-	90		210	-	77	10.20	23.7×10^{-3}
65	I	10.19	6.25	973	4250	20	22	70	135	115	-	68	35	26	75	-	4.5	185	61	-	10.10	24.5×10^{-3}
	II							80		-	133										11.50	27.8×10^{-3}
	III														-	100		235	-	86	15.00	36.3×10^{-3}
75	I	20.73	12.8	1980	3550	28	30		160	135	-	80	40	30	85	-	5	210	69	-	16.00	54×10^{-3}
	II							95		-	158										18.20	61.4×10^{-3}
	III														-	110		260	-	84	21.20	71.5×10^{-3}
90	I	36.89	24	3523	2800	38	40	97	200	160	-	100	45	34	100	-	5.5	245	81	-	27.50	138×10^{-3}
	II							110		-	198										36.30	182×10^{-3}
	III														-	125		295	-	106	44.80	225×10^{-3}

Weight & Moment of Inertia (M.I.) of coupling assembly refer to maximum finish bore without keyway.

* Alternative hub material available on request - Steel (Sizes 19 to 90) , S. G. Iron (Sizes 38 to 90).

CURVE-FLEX COUPLINGS
TYPE RRJ

RATHI® Europe

SPIDER

TECHNICAL DATA - Polyurethane Spiders

Spider Size	Red (Std.)		Yellow	
	T_{nom} (Nm)	T_{max} (Nm)	T_{nom} (Nm)	T_{max} (Nm)
19	17	34	10	20
24	60	120	35	70
28	160	320	95	190
38	325	650	190	380
42	450	900	265	530
48	525	1050	310	620
55	685	1370	410	820
65	940	1880	625	1250
75	1920	3840	1280	2560
90	3600	7200	2400	4800
Hardness	95 Shore A		92 Shore A	
Temperature	- 40°C to 90°C			

Selection Procedure:

1. Determine Application Nominal Torque (Nm)
   Tnom (Nm) = (kw x 9550/rpm)

2. Calculate application service factor using following charts - Total service factor (SF) will be SF = SF1 x SF2 x SF3

3. Calculate Application Maximum Torque (Tmax)
   Tmax = Tnom X SF (Nm)

4. Select the proper spider showing Tnom greater than application nominal torque. Then select spider showing Tmax greater than application maximum torque. Select the higher of two.

5. Ensure that application rpm and max. bore requirements are less than or equal to selected coupling max. rpm and max. bore size otherwise select next size coupling.

For SF1, SF2, SF3 refer chart.

SF1 - Application Service Factor

Driven Machine / Example	Electric Motors	Prime Motor	
		4 Cylinder or more	Less than 4 Cylinder
a. Uniform operation, no shocks.	1.5	2.0	2.5
b. Irregular operation, light shocks.	2.0	2.5	3.0
C. Irregular operation, medium shocks.	2.5	3.0	3.5
D. Irregular operation, heavy shocks.	3.0	3.5	4.0

SF2 - Application Service Factor for Temperature

Temperature Range °C	< 30°C	30°C - 70°C	> 70°C
SF2	1.0	1.5	2.0

SF3 - Application Service Factor for starting frequency

Starting frequency cycles / hour	< 100	100 - 500	> 500
SF3	1.0	1.5	2.0

MISALIGNMENT DATA

Size	19	24	28	38	42	48	55	65	75	90
Maximum axial displacement (mm)	1.6	1.8	2.0	2.2	2.3	3.0	3.0	3.5	3.5	4.5
Maximum radial misalignment (mm)	0.15	0.20	0.20	0.25	0.30	0.35	0.35	0.40	0.45	0.50
Maximum angular misalignment (Deg.)	0.80	0.80	0.80	0.90	0.90	1.0	1.0	1.0	1.1	1.1

ORDER SEQUENCE	Coupling Size	Hub Type (Driver / Driven)	Finish Bore (Driver / Driven)	Spider Type	Hub Material
Example	RRJ-55	I / II	40 / 60	Red	CI

- Coupling with std. Spider is supplied if not specified.

- All dimensions are in mm unless otherwise specified.
- For vertical installation contact RATHI.

B FLEX COUPLINGS
TYPE RB

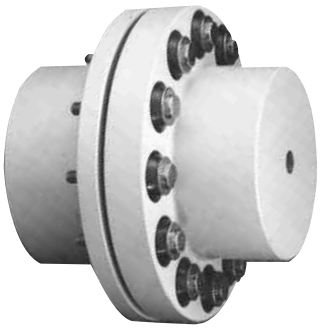

Rathi B-FLEX couplings consist of a set of resilient BARREL shaped bushes with pins & nuts and two flanged hubs of graded cast iron.

These special BARREL shaped bushes permit the MISALIGNMENT IN ALL DIRECTIONS and give extra torsional flexibility as compared to plain bushes. These couplings are suitable for general engineering application requiring reliable power transmission even under conditions of shaft misalignments which are often unavoidable.

Pin-Bush Assembly

Bush
(Natural Rubber/PU/H-Trans)

F E A T U R E S

Simplicity Of Construction
Easy to assemble & disassemble. Suitable independent running of the drive.

Varying Stiffness Characteristics
Special barrel shaped bushes provide progressively increasing stiffness characteristics, hence ensure effective shocks & vibration absorption.

No Lubrication
B-FLEX couplings never require lubrication of any kind.

Simple / Easy Maintenance
No complicated mechanism to demand adjustment or maintenance. Inspection and replacement of bushes is easy and bushes can be quickly fitted without dismantling or moving either of coupled shafts.

Low Operational Cost
Only wearing part is low cost bushes which make coupling economical in long run.

Smooth & Quiet Operation
Reduces vibration & noise arising from severe torque fluctuations.

B FLEX COUPLINGS
TYPE RB

RATHI® Europe

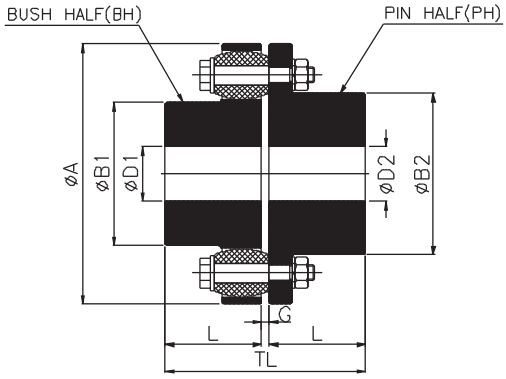

UPTO SIZE RB-360

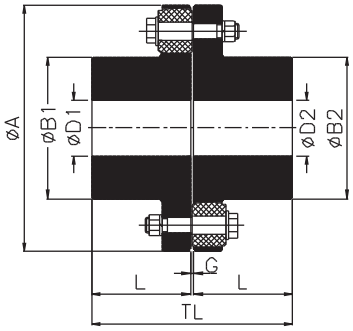

FROM SIZE RB-400 ONWARDS

TECHNICAL DATA

Coupling Size	Coupling Rating @100RPM						Max. Speed rpm	Min. Bore	Max. Bore		ØA	ØB1	ØB2	L	G	TL	Wt. in kg.	M.I.(WR²) in kgm²	Max. Misalignment		
	Synthetic Rubber		Polyurethane		H - Trans														Axial (mm)	Radial (mm)	Angular
	HP	KW	HP	KW	HP	KW			ØD1	ØD2											
RB-105-3	1.34	1	2	1.5	3.35	3	7200	11	30	32	105	48	50	45	2-6	94	2	0.0030	2	0.3	1°
RB-116-4	2.01	1.5	3	2.3	5.03	4	6100	12	39	42	116	60	68	45	2-6	94	2.6	0.0050	2	0.3	1°
RB-125-4	2.28	1.7	3.4	2.6	5.7	4	5500	14	45	50	125	68	78	50	2-6	104	3.1	0.0070	2	0.4	1°
RB-144-6	4.42	3.3	6.6	5	11.06	8	4900	18	50	60	144	82	91	55	2-6	114	4.3	0.012	2	0.4	1°
RB-162-6	7.37	5.5	11.1	8.3	18.43	14	4500	22	60	65	162	89	100	60	2-6	124	7.5	0.030	2	0.4	1°
RB-178-6	8.98	6.7	13.5	10.1	22.45	17	3800	24	70	75	178	105	115	70	2-6	144	10	0.040	2	0.5	1°
RB-198-10	17.42	13	26.1	19.5	43.55	33	3400	28	80	90	198	124	135	80	2-6	164	13	0.062	2	0.5	1°
RB-228-11	28.14	21	42.2	31.5	70.35	53	3000	28	90	100	228	133	146	90	4-10	187	18	0.100	3	0.6	1°
RB-252-12	42.88	32	64.3	48	107.2	80	2700	38	105	115	252	156	167	100	4-10	207	24	0.17	3	0.6	1°
RB-285-11	64.32	48	96.5	72	160.8	120	2400	48	115	125	285	170	186	110	4-10	227	35	0.31	3	0.7	1°
RB-320-12	85.76	64	128.6	96	214.4	160	2100	55	125	135	320	196	212	125	4-10	257	51	0.53	3	0.7	1°
RB-360-11	124.62	93	186.9	139.5	312	233	1900	65	135	150	360	212	232	140	4-12	288	73	1.02	4	0.9	1°
RB400-10	168.84	126	253.3	189	-	-	1700	75	160		410	230		160	4-12	328	101	1.70	4	1.1	1°
RB-450-12	261.30	195	392	292.5	-	-	1500	85	180		450	260		180	4-12	368	137	2.90	4	1.1	0.5°
RB-500-14	361.80	270	542.7	405	-	-	1350	95	200		500	290		200	4-12	408	180	4.70	4	1.1	0.4°
RB-560-10	435.50	325	653.3	487.5	-	-	1200	95	225		560	320		220	4-8	446	278	10.70	2	1.5	0.3°
RB-630-12	589.60	440	884.4	660	-	-	1050	100	250		630	355		240	4-8	486	365	17.4	2	1.5	0.3°
RB-710-12	1051.90	785	1577.9	1177.5	-	-	950	100	260		710	385		260	5-9	527	516	33	2	1.8	0.3°
RB-800-14	1402.98	1047	2104.5	1570.5	-	-	850	100	280		800	420		290	5-9	587	691	53	2	1.8	0.3°
RB-900-16	2174.82	1623	3262.2	2434.5	-	-	750	100	305		900	465		320	5-9	647	927	86	2	1.8	0.3°
RB-1000-18	2736.28	2042	4104.4	3063	-	-	680	125	320		1000	515		350	5-10	708	1224	142.8	2	2.0	0.1°
RB-1120-18	3788.18	2827	-	-	-	-	600	135	350		1120	560		380	6-11	769	1584	231	2	2.2	0.1°
RB-1250-20	4841.42	3613	-	-	-	-	550	150	380		1250	610		420	6-11	849	2070	367.5	2	2.4	0.1°
RB-1400-20	7437.00	5550	-	-	-	-	490	175	440		1400	700		480	6-12	969	3060	693	2	2.7	0.1°
RB-1600-24	10524.36	7854	-	-	-	-	430	200	480		1600	770		540	6-12	1089	3960	1155	2	3.0	0.1°
RB-1800-22	13681.40	10210	-	-	-	-	380	225	540		1800	870		600	8-16	1212	5760	2205	2	3.4	0.1°
RB-2000-26	18242.76	13614	-	-	-	-	340	250	600		2000	960		660	8-16	1332	7020	3255	2	3.8	0.1°

- PH = Pin Half (Drive) upto size 360
- BH = Bush Half (Driven) upto size 360

SPARE PARTS

Coupling SIZE	Pin Half Part No.	Bush Half Part No.	Pin + Washer Part No.	Bush Part No.	No. Of Pin-Bush Assy./Coupling	Nut Size
RB-105-3	RB-105-3/1	RB-105-3/2	RB/P-2	RB/B-2	3	M8
RB-116-4	RB-116-4/1	RB-116-4/2	RB/P-2	RB/B-2	4	M8
RB-125-4	RB-125-4/1	RB-125-4/2	RB/P-2	RB/B-2	4	M8
RB-144-6	RB-144-6/1	RB-144-6/2	RB/P-2	RB/B-2	6	M8
RB-162-6	RB-162-6/1	RB-162-6/2	RB/P-3	RB/B-3	6	M10
RB-178-6	RB-178-6/1	RB-178-6/2	RB/P-3	RB/B-3	6	M10
RB-198-10	RB-198-10/1	RB-198-10/2	RB/P-3	RB/B-3	10	M10
RB-228-11	RB-228-11/1	RB-228-11/2	RB/P-4	RB/B-4	11	M14
RB-252-12	RB-252-12/1	RB-252-12/2	RB/P-4	RB/B-4	12	M14
RB-285-11	RB-285-11/1	RB-285-11/2	RB/P-5	RB/B-5	11	M16
RB-320-12	RB-320-12/1	RB-320-12/2	RB/P-5	RB/B-5	12	M16
RB-360-11	RB-360-11/1	RB-360-11/2	RB/P-6	RB/B-6	11	M20
RB-400-10	RB-400-10		RB/P-7	RB/B-7	10	M20
RB-450-12	RB-450-12		RB/P-7	RB/B-7	12	M20
RB-500-14	RB-500-14		RB/P-7	RB/B-7	14	M20
RB-560-10	RB-560-10		RB/P-8	RB/B-8	10	M36
RB-630-12	RB-630-12		RB/P-8	RB/B-8	12	M36
RB-710-12	RB-710-12		RB/P-9	RB/B-9	12	M42
RB-800-14	RB-800-14		RB/P-9	RB/B-9	14	M42
RB-900-16	RB-900-16		RB/P-9	RB/B-9	16	M42
RB-1000-18	RB-1000-18		RB/P-9	RB/P-9	18	M42

NOTES -
* All dimensions are in mm. Unless otherwise specified.
* Weight & inertia figures are at maximum bores.
* Each coupling is capable of withstanding maximum torque of 3 times of nominal torque for short durations such as during start up.
* For vertical installation contact RATHI.

CONE-FLEX COUPLINGS
TYPE RC / RCT

Cone Flex Ring
(Nitrile / PU / H - Trans)

Cone Flex Pin Ring Assembly

Rathi Cone - Flex couplings consists of sets of resilient "Cone-Flex" rings with pins & nuts and two flanged hubs of graded cast iron. These "Cone-Flex" rings are specially shaped to permit the rubber to deflect in all directions and give over four times torsional flexibility as compared to a plain bush.

UNMATCHED SIMPLICITY :
Easy to assemble & disassemble. With pins removed, the equipment can run independently for no load. Flanged hub can be withdrawn upwards without disturbing original alignment.

NO LUBRICATION :

"Cone-Flex" couplings do not require lubrication of any kind whatsoever.

SIZE AND COST :

High torque capacity for compact size and low weight.

SIMPLE / EASY MAINTENANCE :
No complicated mechanism to demand adjustment or maintenance. Inspection and replacement of "Cone-Flex" rings are easy and can be quickly fitted without dismantling or moving either of coupled shafts.

LOW OPERATIONAL COST :
Only wear part is low cost "Cone-Flex" rings make the coupling economical in long run.

SMOOTH & QUIET OPERATION :
Reduces vibrations and noise arising from severe torque fluctuations.
"Cone-Flex" couplings are suitable in ambient temperature upto 70^0 C.

CONE-FLEX COUPLINGS
TYPE RC / RCT

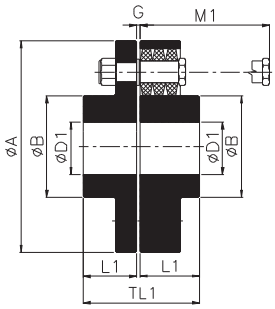

TYPE RC

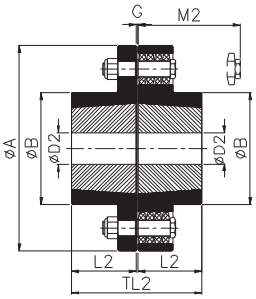

TYPE RCT

TECHNICAL DATA

Type	Size	POWER RATING						Max. Speed RPM	ØD1(RC)		#ØD2(RCT)			Dimensions									Wt. in Kg (Min. Bore)		M.I. (WR²) Kg m² (Min. Bore)	
		Synthetic Rubber		Polyurethane		HTrans															RC	RCT				
		KW @ 100 RPM	Rated Torque Nm	KW @ 100 RPM	Rated Torque Nm	KW @ 100 RPM	Rated Torque Nm		Min. Bore	Max. Bore	Min. Bore	Max. Bore	# Bush Size	ØA	ØB	L1	L2	G	TL1	TL2	M1	M2	RC	RCT	RC	RCT
RC	020	0.56	50	0.84	75	1.40	125	6500	12	22	-	-	-	89	35	33	-	3	69	-	30	-	1.4	-	0.0015	-
	030	1.2	110	1.8	165	3.0	275	5470	12	32	-	-	-	127	51	41	-	3	85	-	28	-	3.7	-	0.0078	-
	038	2.0	190	3.0	285	5.0	475	5260	15	40	-	-	-	132	64	48	-	3	99	-	22	-	4.2	-	0.0095	-
RC/ RCT	042	3.0	290	4.5	435	7.5	725	4750	15	44	12	32	1215	146	70	56	38	3	115	79	14	32	5.6	5	0.0144	0.0163
	048	5.0	480	7.5	720	12.5	1200	4050	21	52	16	42	1615	171	81	61	38	3	125	79	28	52	6.4	9	0.0357	0.0346
	058	8.0	760	12.0	1140	20	1900	3600	21	62	14	50	2017	193	97	68	45	3	139	93	24	52	13	12	0.0588	0.0567
	070	11.0	1000	17	1500	28	2500	3220	21	74	19	60	2525	216	117	76	64	3	155	130	23	28	19	17	0.0980	0.0951
	075	27	2600	41	3900	68	6500	2730	28	80	16	60	2525	254	127	88	64	3	179	131	50	28	34	33	0.2882	0.2827
	085	37	3500	56	5250	93	8750	2480	28	92	35	75	3030	279	147	100	76	3	203	155	38	60	45	37	0.4337	0.4237
	105	56	5300	84	7950	140	13250	2100	34	114	35	90	3535	330	180	117	89	3	237	181	25	54	67	59	0.8767	0.8529
	120	94	9000	141	13500	235	22500	1880	61	130	40	100	4040	370	206	132	102	6	270	210	48	78	95	95	1.9162	1.8753
	135	128	12223	192	18334.5	320	30557.5	1660	67	144	55	110	4545	419	230	147	114	6	300	235	35	68	128	120	3.1724	3.1032
	150	167	16000	251	24000	418	40000	1520	82	160	70	125	5050	457	256	165	127	6	336	260	16	55	154	141	4.6277	4.4951
RC	170	262	25000	393	37500	655	62500	1300	96	184	-	-	-	533	292	188	-	6	382	-	48	-	249	-	10.5670	-
	190	360	34377	540	51565.5	900	85942.5	1170	122	206	-	-	-	597	330	211	-	6	428	-	28	-	304	-	17.0054	-
	215	471	45000	707	67500	1178	112500	1050	135	230	-	-	-	660	368	237	-	6	480	-	10	-	392	-	26.1883	-
	240	788	75248	1182	112872	1970	188120	800	152	254	-	-	-	737	407	264	-	6	534	-	43	-	578	-	50.1718	-
	265	1047	100000	1571	150000	2618	250000	700	165	286	-	-	-	826	457	292	-	6	590	-	15	-	775	-	81.8464	-

Notes :
- Maintain gap G at the time of assembly
- For vertical installation contact RATHI.

\# Available only with Taper Bore, without Taper Bush.

Axial Misalignment : Size 020 to 058 : 2 mm (±), Size 070 to 135 : 3 mm (±), Size 150 to 215 : 2 mm (±), Size 240 to 265 : 1.5 mm (±)
Angular Misalignment : Size 020 to 135 :1° , Size 150 to 265 : 0.5°
Radial Misalignment : Size 020 : 0.3 mm (±), Size 030 to 042 : 0.4 mm (±), Size 048 to 058 : 0.5 mm (±), Size 070 to 075 : 0.6 mm (±), Size 085 to 105 : 0.7 mm (±), Size 120 : 0.9 mm (±), Size 135 to 170 : 0.11 mm (±), Size 190 to 215 : 0.15 mm (±), Size 240 to 265 : 0.18 mm (±),

SPARE PARTS

Type RC			Type RCT				Pins and Nuts			Cone Rings	
Size	Pin Half Part No.	Bush Half Part No.	Size	Bush Size	Pin Half Part No.	Bush Half Part No.	Pin Part No.	Nut Size	No/per Coupling	Part No.	No/per Coupling
RC-020	RC020/1	RC020/2	-	-	-	-	GC 3/4" /3/5	M 8	6	GC 3/4" /4	18
RC-030	RC030/1	RC030/2	-	-	-	-	GC 1"/3/5	M 10	4	GC 1" /4	12
RC-038	RC038/1	RC038/2	-	-	-	-			6		18
RC-042	RC042/1	RC042/2	RCT-042	1215	RCT042/1	RCT042/2			8		24
RC-048	RC048/1	RC048/2	RCT-048	1615	RCT048/1	RCT048/2	GC 1 3/4"/3/5	M 12	6	GC 1 3/4"/4	18
RC-058	RC058/1	RC058/2	RCT-058	2017	RCT058/1	RCT058/2			8		24
RC-070	RC070/1	RC070/2	RCT-070	2525	RCT070/1	RCT070/2			10		30
RC-075	RC075/1	RC075/2	-	-	-	-	GC 2 3/4" /3/5	M 20	8	GC 2 3/4"/4	32
RC-085	RC085/1	RC085/2	RCT-085	3030	RCT085/1	RCT085/2			10		40
RC-105	RC105/1	RC105/2	RCT-105	3535	RCT105/1	RCT105/2			12		48
RC-120	RC120/1	RC120/2	RCT-120	4040	RCT120/1	RCT120/2	GC 4 1/4"/3/5	M 24	10	GC 4 1/4"/4	40
RC-135	RC135/1	RC135/2	RCT-135	4545	RCT135/1	RCT135/2			12		48
RC-150	RC150/1	RC150/2	RCT-150	5050	RCT150/1	RCT150/2			14		56
RC-170	RC170/1	RC170/2	-	-	-	-	GC 6 1/4"/3/5	M 36	10	GC 6 1/4"/4	40
RC-190	RC190/1	RC190/2	-	-	-	-			12		48
RC-215	RC215/1	RC215/2	-	-	-	-			14		56
RC-240	RC240/1	RC240/2	-	-	-	-	GC 9" /3/5	M 48	12	GC 9"/4	48
RC-265	RC265/1	RC265/2	-	-	-	-			14		56

CONE-FLEX COUPLINGS
TYPE RCS

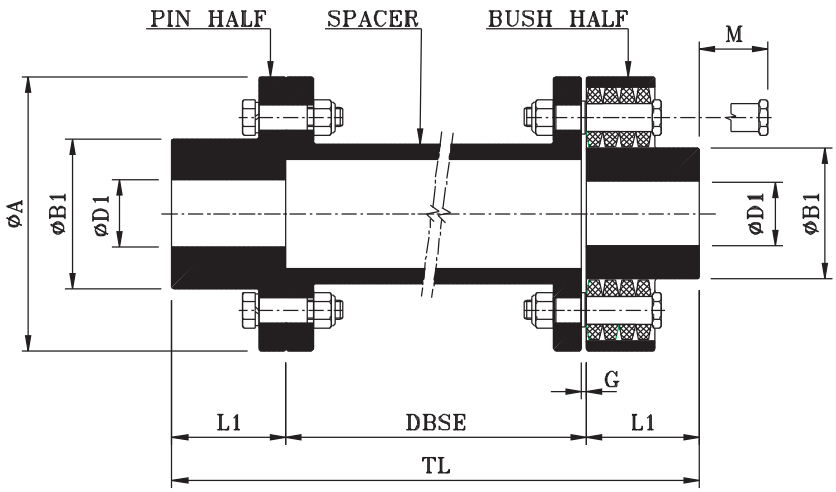

Spacer Type " Cone-Flex" coupling is suitable where distance between shaft ends (DBSE) is large. The spacer member is radially removable without disturbing shaft alignment. Flexible element can be installed without disturbing the hub.

TECHNICAL DATA

Coupling Size	kW at 100 rpm	Torque Nm	Max. Speed rpm	Bore - Ø D1		Dimensions						
				Min.	Max.	ØA	Ø B1	L1	G	DBSE	TL	M
RCS – 020	0.56	50	6500	12	20	89	35	33	3	100 140 180	166 206 246	30
RCS – 030	1.2	110	5470	12	30	127	51	41			182 222 262	28
RCS – 038	2.0	190	5260	15	38	132	64	48			196 236 276	22
RCS – 042	3.0	290	4750	15	42	146	70	56			212 252 292	14
RCS – 048	5.0	480	4050	21	48	171	81	61			222 262 302	28
RCS – 058	8.0	760	3600	21	58	193	97	68			236 276 316	24
RCS – 070	11.0	1000	3220	21	70	216	117	76			252 292 332	23

- All dimensions are in mm unless otherwise specified.
- For vertical installation contact RATHI.
- Higher sizes available on request.

RIGID COUPLINGS
TYPE RR / RRT

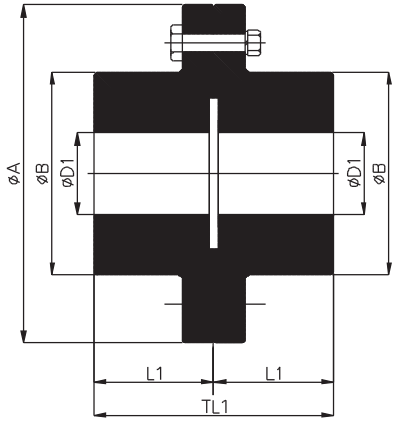

TYPE - RR

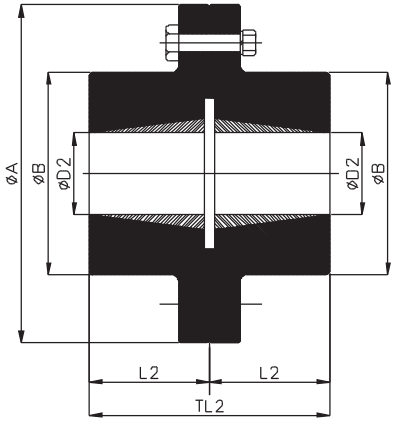

TYPE - RRT

Rathi Rigid Couplings are robust, simple & ideal for exactly aligned shafts. They are torsionally stiff & backlash free. Type RR permits larger finish bores in both halves.

TECHNICAL DATA

Coup-ling Type	Size	"kW at 100 RPM"	Torque Nm	Max. Speed RPM	RR		RRT			ØA	ØB	L1	TL1	L2	TL2	Wt. in Kg. (Min. Bore)		M.I. (WR^2) Kg. m^2 (Min. Bore)	
					ØD1		ØD2												
					Min. Bore	Max. Bore	Min. Bore	Max. Bore #	Bush Size							RR	RRT	RR	RRT
RR	020	1.06	101	6500	12	22	-	-	-	89	35	33	66	-	-	1.6	-	0.002	-
RR/ RRT	030	2.30	220	5470	12	32	10	25	1008	127	51	41	82	23	46	3.2	2.8	0.004	0.004
	038	4.80	458	5260	15	40	10	28	1108	132	64	48	96	23	46	4.1	3.6	0.006	0.006
	042	6.40	611	4750	15	44	12	32	1215	146	70	56	112	38.1	76.2	5.6	5	0.008	0.008
	048	9.63	920	4050	21	52	16	42	1615	171	81	61	122	38	76	9.3	8.3	0.024	0.023
	058	16.90	1614	3600	21	62	14	50	2017	193	97	68	136	47	94	12	10.7	0.04	0.038
	070	29.90	2855	3220	21	74	16	60	2525	216	117	76	152	63.5	127	18	16	0.07	0.067
	075	36.50	3485	2730	28	80	16	60	2525	254	127	88	176	68	136	32	30	0.18	0.177
	085	53.40	5099	2480	28	92	24	75	3030	279	147	100	200	76	152	44	39.3	0.28	0.260
	105	100.0	9549	2100	34	114	35	90	3535	330	180	117	234	89	178	69	61	0.59	0.56
	120	149.0	14228	1880	61	130	40	100	4040	370	206	132	264	102	204	109	97	1.42	1.36
	135	213.0	20340	1660	67	144	55	115	4545	419	230	147	294	114.3	228.6	145	129	2.35	2.25
	150	292.0	27884	1520	82	160	70	127	5050	457	256	165	330	127	254	186	166	3.48	3.33
RR	170	470.0	44882	1300	96	184	-	-	-	533	292	188	376	-	-	350	-	9.52	-
	190	575.0	54908	1170	122	206	-	-	-	597	330	211	422	-	-	475	-	14.2	-
	215	750.0	71620	1050	135	230	-	-	-	660	368	237	474	-	-	640	-	22.8	-

\# Available only with taper bore, without taper bush.

● For vertical installation contact RATHI.

TYRE-FLEX COUPLINGS
TYPE T / TO / RST

The flexible capabilities of the Tyreflex Coupling help to accommodate angular, parallel and axial misalignments.

Parallel Misalignment upto 6 mm.Angular Misalignment upto 4^0. End Float upto 8 mm. Suitable in ambient temp. upto 70^0C.

CUSHIONING SHOCK LOADS

Tyreflex being a torsionally soft coupling protects against vibration, impact loads and heavy shocks in the event of sudden load changes.

EASE OF ASSEMBLY / DISASSEMBLY

Alignment is quickly checked by placing a straight edge across the outside diameters of the flanges.

Installation or replacement of new tyre is achieved without disturbing driver or driven shafts, simply by loosening the clamping screws, placing a new tyre between the flanges and clamping rings and then tightening the clamping screws.

TYRE-FLEX COUPLING - RST

Tyre-flex Spacer Couplings RST are specifically designed for motor-pump installations, where it is desirable not to disturb drive/driven equipment while servicing impellers, packing glands, etc.

The maintenance time-reduction feature is valuable on pumps, compressors and many other applications.

SELECTION PROCEDURE - T/TO

(a) Service Factor
Determine the required service factor from table 1.

(b) Design Power
Multiply the normal running power by the service factor. This gives **Design Power** which is used as a basis for selecting the coupling.

(c) Coupling Size
Refer table 2 and from the appropriate speed read across until a power greater than that required is found. The size of Tyre-flex coupling required is given in that column..

(d) Bore Size
Check from table 3 that selected coupling can accommodate required bores.

SELECTION PROCEDURE - RST

1. Select a suitable size of Tyre-flex coupling using the procedure.
2. Refer size column in table A and locate the size of coupling selected.
3. Read across this size until required DBSE can be accommodated.
4. The size of the spacer coupling is given in the first column of table A.
5. Refer coupling dimensional table A to check that the required bores can be accommodated.

TYRE-FLEX COUPLINGS
TYPE T / TO / RST

RATHI® Europe

TABLE 1 : SERVICE FACTORS

SPECIAL CLASSES For applications where substantial shock, vibration and torque fluctuations occur and for reciprocating machines e.g. internal combustion engines, piston pumps and compressors, refer to Rathi Transpower Pvt. Ltd. with full application details for analysis.	Type of Driving Unit					
	Electric Motors Steam Turbines			Internal Combustion Engines Steam Engines Water Engines		
	Hours per day duty			Hours per day duty		
Type of Driven Machine	upto 10	over 10 to 16 incl.	Over 16	upto 10	over 10 to16 incl.	Over 16
CLASS 1 Agitators, Brewing mahinery, Centrifugal compressors and pumps, Belt Conveyors, Dynamometers, Lineshafts, Fans upto 7.5 kW, Blower and exhausters (except positive displacement), Generators.	0.8	0.9	1.0	1.3	1.4	1.5
CLASS 2 Clay working machinery, General machine tools, Paper mill beaters and winders, Rotary pumps, Rubber extruders, Rotary Screens, Textile Machinery, Marine Propellers, and Fans over 7.5 kW.	1.3	1.4	1.5	1.8	1.9	2.0
CLASS 3 Bucket elevators, Cooling tower fans, Piston compressors & pumps, Foundry machinery, Metal presses, Paper mill Calenders, Hammer mills, Presses and pulp grinders, Rubber Calenders, Pulverisers and Positive displacement blowers.	1.8	1.9	2.0	2.3	2.4	2.5
CLASS 4 Reciprocating conveyors, Gyratory crushers, Mills (ball, pebble and rod). Rubber Machinery (Banbury Mixers and Mills) and Vibratory screens.	2.3	2.4	2.5	2.8	2.9	3.0

TABLE 2 : POWER RATING (kW)

Speed rpm	Size T /TO														
	4	5	6	7	8	9	10	11	12	14	16	18	20	22	25
100	0.25	0.69	1.33	2.62	3.93	5.24	7.07	9.16	13.9	24.3	39.5	65.7	97.6	121	154
750	1.87	5.17	9.97	19.65	29.47	39.30	53.02	68.70	104.25	182.25	296.25	492.75	732	907.5	1155
1000	2.50	6.90	13.30	26.20	39.30	52.40	70.70	91.60	139.0	243.0	395.0	657.0	976	1215	1537
1500	3.75	10.35	19.95	39.30	58.95	78.60	106.05	137.40	208.50	364.50	592.50*	986.5*	-	-	-
1800	4.50	12.42	23.94	47.16	70.74	94.32	127.26	164.88	250.20	437.40*	-	-	-	-	-
3000	7.50	20.70	39.90	78.60	117.90*	157.20*	-	-	-	-	-	-	-	-	-
3600	9.00	24.84	47.98	94.32	-	-	-	-	-	-	-	-	-	-	-

- All these power ratings are calculated at constant torque.
- For speeds below 100 rpm and intermediate speeds use normal torque ratings.

* Dynamic balancing preferred at these speeds.

Poles	2	4	6	8
rpm	3000	1500	1000	750

TECHNICAL DATA - FLEXIBLE TYRES

Size	4	5	6	7	8	9	10	11	12	14	16	18	20	22	25
Max. Speed rpm	4500	4500	4000	3600	3100	3000	2600	2300	2050	1800	1600	1500	1300	1100	1000
Torsional Stiffness Nm/Deg.	5	13	26	41	63	91	126	178	296	470	778	1371	1959	2760	3562
Parallel Misalignment mm	1.1	1.3	1.6	1.9	2.1	2.4	2.6	2.9	3.2	3.7	4.2	4.8	5.3	5.8	6.6
End Float mm	1.3	1.7	2.0	2.3	2.6	3.0	3.3	3.7	4.0	4.6	5.3	6.0	6.6	7.3	8.2
Normal Torque Nm	24	66	127	250	375	500	675	875	1330	2325	3730	6270	9325	11600	14675
Max. Torque Nm	64	160	318	487	759	1096	1517	2137	3547	5642	9339	16455	23508	33125	42740

TYRE-FLEX COUPLINGS
TYPE T / TO

RATH® Europe

T - 4 to T-12 | TO - 7 to TO-25

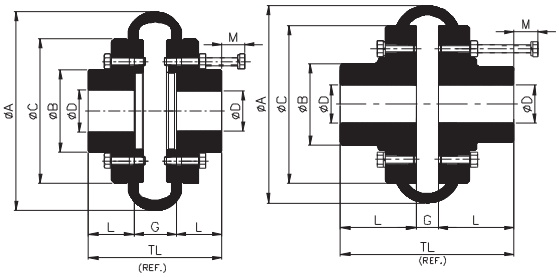

DIRECT SHAFT FITMENT P TYPE B

T - 4 to T-12 | TO - 7 to TO-22

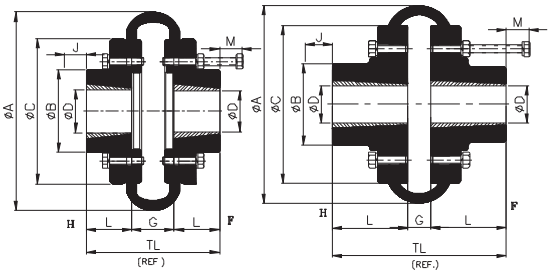

TAPER BUSH FITMENT - TYPE F/H

TABLE 3 : DIMENSIONS OF TYRE-FLEX HUB TYPES B, F & H

SIZE	KW @ 100 RPM	MAX. SPEED (RPM)	TYPE	# BUSH SIZE	BORE ØD		TYPE F/H			TYPE B		ØA	ØC	ØB	M	G	WT.(Kg)	M.I. (WR²) Kg-m ²
					PB	MAX.	TL	L	J	TL	L							
T-4	0.25	4500	B	-	10	32	-	-	-	68	22	104	82	-	17	24	1.9	0.00161
			F/H	1008	-	25	68	22	29	-	-						1.7	0.00148
T-5	0.69	4500	B	-	10	38	-	-	-	93	32	133	100	79	17	29	3.5	0.00358
			F/H	1210	-	32	79	25	38	-	-				19		2.7	0.00349
T-6	1.33	4000	B	-	15	45	-	-	-	111	38	165	125	73	8	35	5	0.0105
			F/H	1610	-	42	85	25	38	-	-			103	19		3.6	0.0103
TO-7	2.62	3600	B	-	19	50	-	-	-	106	45	197	144	82	-	16	8.4	0.0177
			F	2012	-	50	80	32	38	-	-				9		6.35	0.0192
			H	1610		42	66	25									6.2	0.0157
TO-8	3.93	3100	B	-	25	63	-	-	-	124	51	210	167	96	10	22	11.5	0.0329
			F	2517	-	60	112	45	42	-	-				9		8.53	0.0303
			H	2012		50	86	32									8.5	0.0293
TO-9	5.24	3000	B	-	30	75	-	-	-	138	57	235	188	110	-	24	16	0.0599
			F/H	2517	-	60	114	45	48	-	-				-		12	0.0538
TO-10	7.07	2600	B	-	32	80	-	-	-	144	60	254	216	125	-	24	22.7	0.1148
			F	3020	-	75	126	51	48	-	-				-		18.2	0.1062
			H	2517		60	114	45									18.1	0.1058
TO-11	9.16	2300	B	-	32	90	-	-	-	152	65	279	233	140	-	22	28.3	0.1631
			F/H	3020	-	75	124	51	55						-		21.1	0.1461
TO-12	13.9	2050	B	-	38	100	-	-	-	177	76	314	264	152	-	24.5	40.1	0.2902
			F	3525	-	90	154.5	65	55	-	-				-		30.33	0.2627
			H	3020	-	75	126.5	51									30.3	0.2622
TO-14	24.3	1800	B	-	58	127	-	-	-	201	89	359	311	195	26	23	60.6	0.6045
			F/H	3525	-	90	153	65	67	-	-				-		42.6	0.4922
TO-16	39.5	1600	B	-	65	140	-	-	-	212	102	395	345	216	-	8	86.4	1.2755
			F/H	4030	-	100	162	77	80	-	-						72.6	1.1134
TO-18	65.7	1500	B	-	70	150	-	-	-	254	116	470	398	220	-	22	133.3	2.1525
			F/H	4535	-	115	200	89	89	-	-						123	1.9514
TO-20	97.6	1300	B	-	70	150	-	-	-	258	114	508	429	220	-	30	144.6	3.1765
			F/H	4535	-	115	208	89	89	-	-						158.3	3.0129
TO-22	121	1100	B	-	75	160	-	-	-	281	127	562	470	240	-	27	181.63	4.7861
			F/H	5040	-	125	231	102	92	-	-						195.1	4.8954
TO-25	154	1000	B	-	85	190	-	-	-	294	132	628	532	275	-	30	281.1	8.129

NOTES:

1) All Dimensions are in mm .
2) M is amount by which clamping screw need to be withdrawn to release tyre .
3) J is wrench clearance to allow for tightening and loosening of the bush on the shaft.
4) Shaft ends, although normally located G apart can project beyond flanges.
5) Weight & Moment of inertia specified for solid bores.
6) # For detailed information about Taper Bore, Please refer Taper Bush catalog.
7) FRAS Tyres are available on request.

TYRE-FLEX COUPLINGS
TYPE RST

RATH® Europe

T-4 to T-6

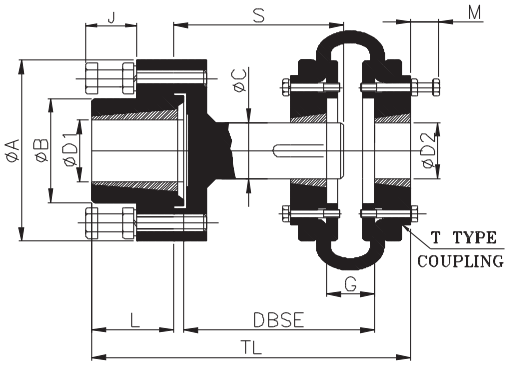

TO-7 to TO-14

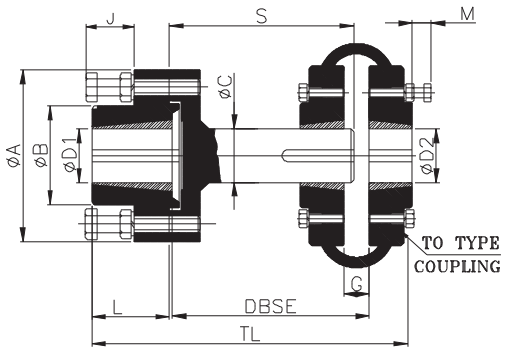

TABLE A - DIMENSIONAL DATA

SPACER SIZE	TYPE	NOM. DBSE	BORE ØD1		ØA	ØB	TL		L	J	S		ØC	TYRE FLEX SIZE T/TO	BORE ØD2		G		M
			PB	MAX.			T	TO			T	TO			PB	MAX.	T	TO	
RST-12	B	80 100	12	42	118	83	127 147	- -	25	22	57 77	-	25	4	10	32	24	-	17
RST-16	B	100 140 100 140 100 140	18	48	127	80	160 200 170 210 176 216	-	38	24	94 134 94 134 94 134	-	32	4 4 5 5 6 6	10 10 10 10 15 15	32 32 38 38 45 45	24 24 29 29 35 35	-	17 17 17 17 8 8
RST-25	B	100 140 180 100 140 180 140 180	38	80	178	127	-	190 230 270 196 236 276 242 282	45	27		94 134 174 94 134 174 134 174	48	7 7 7 8 8 8 9 9	19 19 19 25 25 25 30 30	50 50 50 63 63 63 75 75	-	16 16 16 22 22 22 24 24	- - - 10 10 10 - -
RST-30	B	140 180 140 180	40	90	216	146	-	276 316 281 321	76	33	-	134 174 134	60	10 10 11 11	32 32 32 32	80 80 90 90	-	24 24 22 22	-
RST-35	B	140 180 180	66	110	248	178	-	305 345 358	89	33	-	134 174 174	80	12 12 14	38 38 58	100 100 125	-	25 25 32	- - 26

* T4 'B' flange must be used to fit spacer shaft.
\# For detailed information about Taper Bush bore, please refer Taper Bush catalogue.

- All dimensions are in mm unless otherwise specified.
  M is amount by which clamping screw need to be withdrawn to release tyre.

TABLE B: DISTANCE BETWEEN SHAFT ENDS (DBSE)

Tyre-flex Size T/TO	RST12		RST 16				RST 25						RST 30				RST 35			
	80		100		140		100		140		180		140		180		140		180	
	Min	Max	Min	Max	Min	Max	Min	Max	Min	Max	Min	Max	Min	Max	Min	Max	Min	Max	Min	Max
4	80	100	100	113	140	153														
5			100	116	140	156														
6			100	124	140	164														
7 F							100	107	140	147	180	187								
8 F							100	112	140	152	180	192								
9									140	155	180	195								
10 F													140	151	180	191				
11													140	151	180	192				
12 F																	140	156	180	196
14																	140	153	180	193

NOTES :-

1) Non STD Spacers are available on request .
2) Refer Installation Instructions for Mounting and Dismounting. .
3) Available only with taper bore, without taper bush.

JAW - FLEX COUPLINGS
TYPE RFC

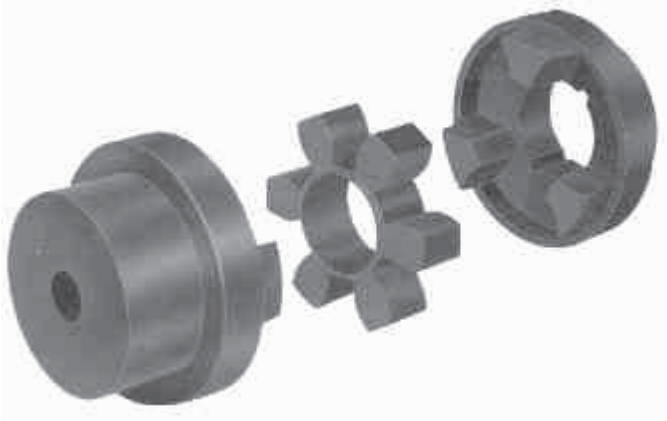

The RFC coupling is a general purpose flexible coupling available in eight different sizes in taper bore, pilot bore or finished bore.

Easy installation
Alignment is quickly achieved by simply placing a straight edge across the outside diameter of the hubs. No special tools are needed, only a hexagon wrench for the locking of the taper bush.

Accommodates Misalignment
The RFC coupling compensates for axial, parallel & angular misalignments.

Extra protection Against Failure
The Inter-linking hubs act as an additional safegaurd, though the flexible element fails, the drive will be maintained by the interaction of the jaws which are an integral part of the coupling hubs. The hubs are made of C. I.. Jaws are unmachined.

Interchangeable
The RFC coupling is compatible with leading makes of couplings.
Elastomeric spider is of Nitrile rubber having shore hardness of 80^0, suitable for temperatures from -40^0 C to + 100^0 C.

TABLE 2. POWER RATING (kW)

Speed rpm	Coupling Size							
	RFC 7	RFC 9	RFC 11	RFC 13	RFC 15	RFC 18	RFC 23	RFC 28
100	0.33	0.84	1.68	3.30	6.28	9.95	20.90	33.00
1500	4.95	12.55	25.15	49.50	94.00	149.00	313.50	495.00
3000	9.90	25.10	50.30	99.00	188.00	298.00	—	—

JAW - FLEX COUPLINGS
TYPE RFC

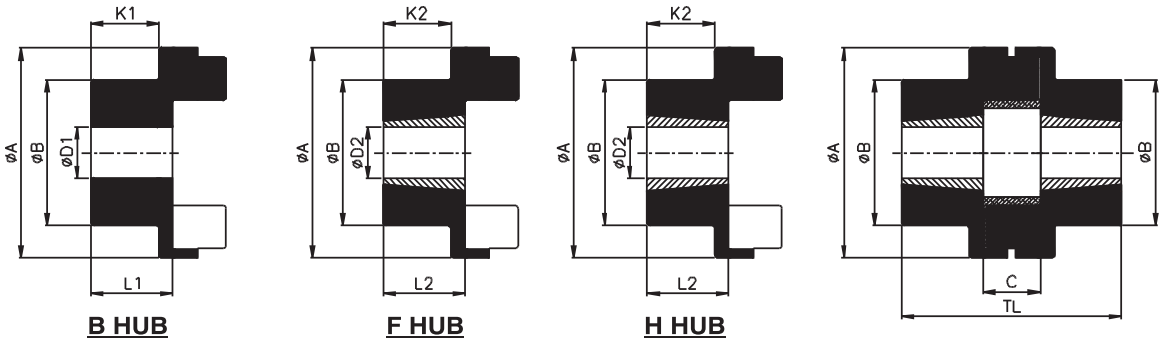

TABLE 3. DIMENSIONS DATA (mm)

Size	B Hub				F / H Hub					ØA	ØB	C	TL		
	Bore ØD1		K1	L1	#Bush Size	Bore ØD2		K2	L2						
	Max.	Min.				Max.	Min.						TL1	TL2	TL3
7	32	10	21	26	1008	25	10	19	24	69	60	17.5	66	68	70.0
9	42	10	26	32	1108	28	10	18	24	85	65	22.5	70.5	78.5	86.5
11	55	10	37	45	1610	42	14	19	27	112	100	29	83	101	119.0
13	60	20	46	55	1610	42	14	17.5	26.5	130	105	36	89	117.5	146.0
15	70	20	50	60	2012	50	14	24	34	150	115	40	108	134	160.0
18	80	30	58	70	2517	60	16	35	47	180	125	49	143	166	189.0
23	100	40	77	90	3020	75	24	39.5	52.5	225	155	58.5	163.5	201	238.5
28	115	50	88.5	105	3535	90	35	74.0	90.5	275	185	74.5	255.5	270	284.5

TABLE 4. TECHNICAL DATA

Size	Maximum Speed rpm	Torque Rating (Nm)		Moment of Inertia WR^2 (kgm^2)	Torsional Stiffness (Nm / degree)	Maximum Misalignment		$ Weight (kg)
		Normal	Maximum			Parallel	Axial	
RFC 7	8300	31.5	72	0.0003	10.2	0.3	+0.20	1.1
RFC 9	6740	80	180	0.001	25.5	0.3	+0.49	1.0
RFC 11	5110	160	360	0.003	48.0	0.3	+0.61	5.0
RFC 13	4400	315	720	0.006	84.0	0.4	+0.79	8.0
RFC 15	3820	600	1500	0.010	176.0	0.4	+0.92	11.7
RFC 18	3180	950	2350	0.022	240.0	0.4	+1.09	18.2
RFC 23	2540	2000	5000	0.065	336.0	0.5	+1.32	35.0
RFC 28	2080	3150	7200	0.191	960.0	0.5	+1.70	66.5

Available only with taper bore, without taper bush.

$ Weight and M.I. are at max bores with one type-B hub combination.

NOTES : TL1 = Combination of F-F / H-H / F-H hub

TL2 = Combination of B-F / B-H hub

TL3 = Combination of B-B hub

SLEEVE FLEX COUPLINGS
TYPE RBW

Sleeve-Flex Elastomeric Couplings

Design Features

Need No Lubrication
No Maintenance
Quick & Easy Installation
Clean & quiet Performance

Sleeve-Flex can be installed quickly and easily, because there are no bolts, gaskets, covers or seals. Alignment can be checked with a straight edge placed across the outside of the precision machined flanges. No special tools are needed for installation, alignment or removal.

The teeth of sleeve lock into the teeth of the flanges without clamps or screws, tightening under torque to provide smooth transmission of power. There is no rubbing action of metal against rubber to cause wear. Couplings are not affected by abrasives, dirt or moisture.

This eliminates the need for lubrication or maintenance, provides clean, dependable, quiet performance.

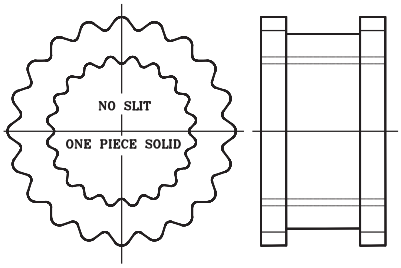

JE SLEEVES (FOR SIZE 3 TO 10)

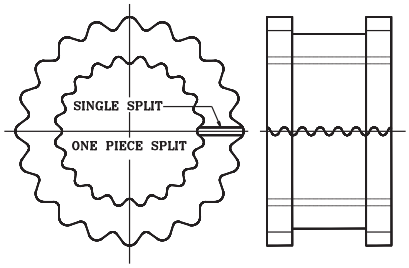

JES SLEEVES (FOR SIZE 3 TO 10).

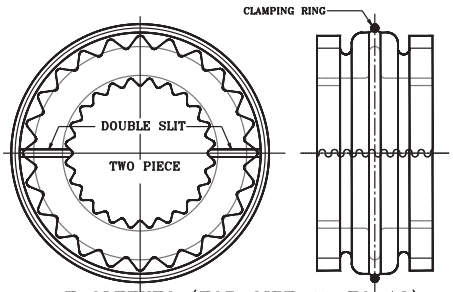

E SLEEVES (FOR SIZE 11 TO 13).

SLEEVE FLEX COUPLINGS
TYPE RBW

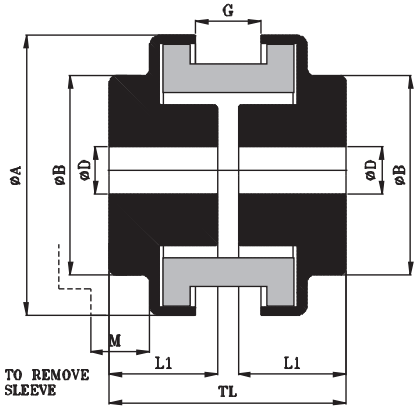

FLANGE TYPE - 'S'

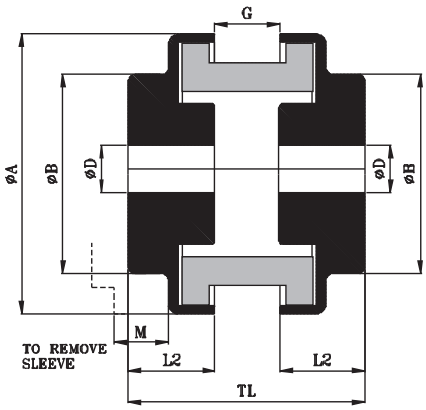

FLANGE TYPE - 'J'

TECHNICAL DATA

Coupling Size	Flange Type	Sleeve Type	kW @ 100 rpm	Rated Torque	Max. Speed	Bore (mm) ØD		Dimensions (mm)							Weight
				N-m	rpm	P.B.	MAX.	A	B	L1	L2	G	TL	M	Kg
3	J	JE, JES	0.08	7.64	9200	10	22	52	38	-	20	9	49	16	0.3
4	J		0.15	14.32	7600	13	25	63	41	-	22	16	60	16	0.5
5	J		0.30	28.65	7600	13	29	83	48	-	26	18	70	23	1.1
	S									34	-	19	71	30	
6	J		0.52	49.66	6000	16	35	102	63	-	33	21	87	28	2
	S									41	-	21	87	36	
7	S		0.90	85.94	5250	16	48	118	71	47	-	25	100	34	2.8
8	S		1.34	127.96	4500	19	54	138	98	53	-	28	112	38	4.8
9	S		2.16	206.26	3750	22	64	161	98	61	-	36	128	45	7.2
10	S		3.43	327.54	3600	29	73	191	111	69	-	41	144	51	11.2
11	S	E	5.37	512.80	3600	32	87	219	133	87	-	48	181	61	18
12	S		8.50	811.69	2800	38	98	254	146	102	-	60	211	68	28
13	S		13.43	1282.47	2400	51	100	299	171	111	-	68	236	78	48

- Flange size 3 & 4 are available in aluminium while 5 to 13 are in cast iron.
- The weight is approximate with solid flange.

- All dimensions are in mm unless otherwise specified.
- For vertical installation contact RATHI.

PIN FLEX COUPLINGS
TYPE RP

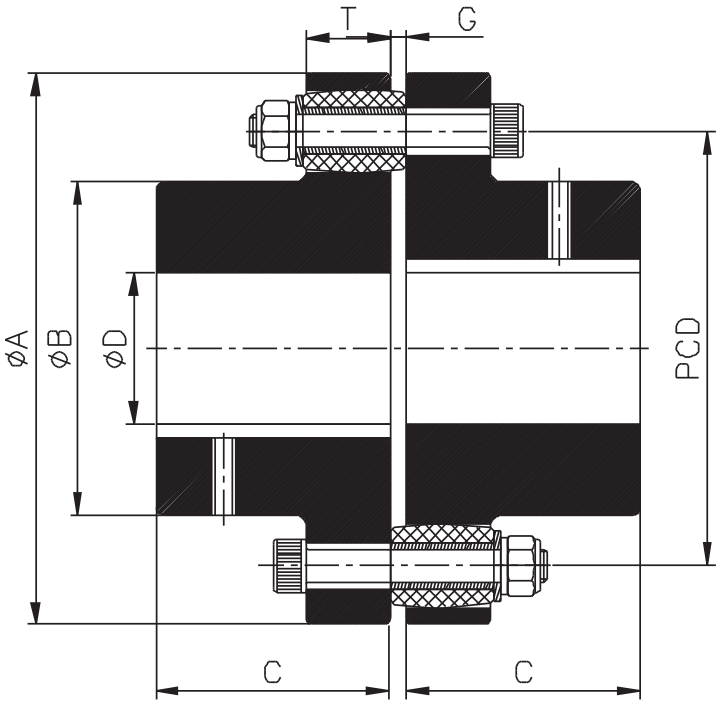

TECHNICAL DATA

Size	Polyurethane buffer			Dimensions (mm)							Solid hub		Bolt Details	
	Torque (Nm)	Kw @ 100 rpm	Max. Speed (rpm)	ØA	ØB	C	ØD (Min-Max)	G	T	PCD	Weight (kg)	M.I. (Kgm2)	Size	Qty.
RP-7.2	50	0.52	5000	72	35	29	12 – 20	2	15	54	1.16	0.00065	M5	6
RP-9.0	325	3.4	6000	90	48	40	16 - 35	3	17	68	2.53	0.002	M6	8
RP-12.5	900	9.4	5800	125	70	50	16 - 50	3	20	95	6.0	0.009	M8	12
RP-14.5	1500	15.7	5500	145	80	65	16 - 58	5	25	112	10.1	0.020	M10	12
RP-16.5	2100	22	4800	165	100	70	22 - 75	5	25	130	14.7	0.037	M10	12
RP-19.5	4200	44	4400	195	120	90	32 - 90	5	30	155	27.13	0.090	M12	12
RP-24.0	9000	94.2	3600	240	150	105	42 - 110	5	35	190	46.6	0.25	M16	16
RP-29.0	17000	177.9	3000	290	180	125	60 - 130	6	50	230	86.2	0.70	M20	16
RP-32.0	22000	230.2	2600	320	210	151	70 - 150	6	50	260	124.3	1.17	M20	16
RP-35.0	30000	314	2400	350	225	161	76 - 160	6	60	285	161.7	1.88	M24	16
RP-38.0	37500	392.5	2200	380	245	181	80 - 180	6	60	310	206.4	2.73	M24	16
RP-51.0	50000	523.6	1300	510	320	211	0 – 200	6	75	410	380	9.20	M30	16
RP-56.0	68000	712.1	1200	560	350	235	0 – 215	10	80	450	500	15.50	M30	16

NOTE :-
1) All dimensions in mm.
2) weight & Inertia shown are at solid bore condition.
3) Maintain Gap 'G' at time of assembly.

PIN FLEX COUPLINGS
TYPE RP SPACER

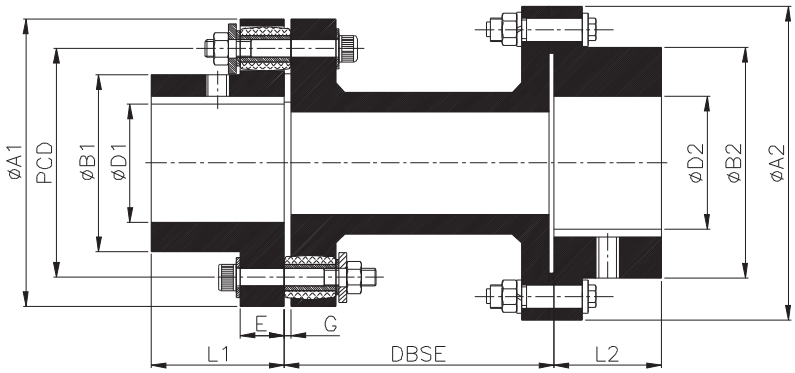

TECHNICAL DATA

Coupling Size	Power Kw at 100 RPM	Rated Torque, Nm	Max Speed, RPM	ØD1 (Min-Max)	ØA1	ØB1	L1	DBSE	G	E	PCD	Bolt Size X Nos	ØD2 (Min-Max)	ØA2	ØB2	L2	Weight (Kg appx)	MI (Kgm2 appx)
RP 16.5 R(25)	22	2100	4800	22-75	165	100	70	140	5	25	130	M10x12	37-110	213	157	73	36	0.096
								180									36.6	0.098
RP 16.5 R(15)								140					26-80	152	107	46	26.7	0.053
RP 19.5 R(25)	44	4200	4400	32-90	195	120	90		5	30	155	M12x12	37-110	213	157	73	51.5	0.155
								180									52.3	0.157
RP 24 R(25)	94.2	9000	3600	42-110	240	150	105	140	5	35	190	M16x16					78.7	0.322
								180									79.4	0.323
RP 29 R(30)	178	17000	3000	60-130	290	180	125		6	50	230	M20x16	44-130	240	182	88	137	0.954
RP 32 R(40)	230.2	22000	2600	70-150	320	210	151		6	50	260	M20x16	52-180	318	250	115	214	1.302
RP 32 R(35)													52-150	279	212	102	198	1.432
RP 35 R(40)	314	30000	2400	76-160	350	225	161		6	60	285	M24x16	52-180	318	250	115	258	2.33
RP 38 R(40)	392.5	37500	2200	80-180	380	245	181		6	60	310	M24x16					315	3.142

NOTE :-
1) All dimensions in mm.
2) weight & Inertia shown are at solid bore condition.
3) Maintain Gap 'G' at time of assembly.

POLYURETHANE TYRE COUPLINGS
TYPE RTP

RATH® Europe

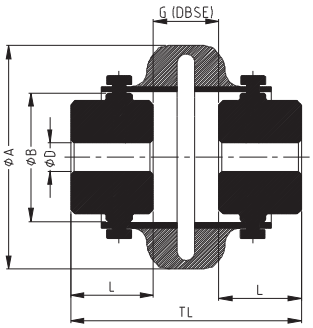

Standard Type

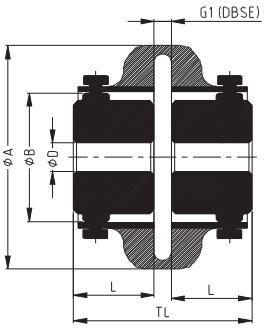

Hub reversed Type

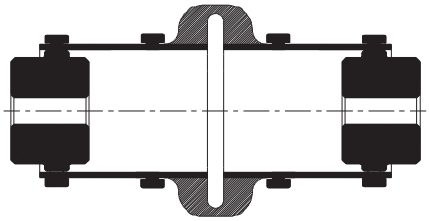

Spacer Type
(Available on request)

Features
Torque transmission is by shear
Tyre is split into two halves, each bonded to a metal bracket
Each tyre is bolted radially to hubs mounted on shafts
Special material with high durability, strength & fatigue resistance

Benefits
Easy maintenance, as assembly & disassembly does not require any special skills
Hubs may be fitted with different orientations to achieve different gaps
Suitable for applications with low stiffness
Higher misalignment capability
Taper lock bushes may be fitted if required

Applications
General Applications - Agitators, Blowers, Conveyors, Cranes, Pumps etc.
Industry Applications - Cement, Food, Lumber, Rubber, Steel, Paper, Power Plants etc.

Size	Power Kw (@100rpm)	Torque Nm (TKN)	Speed rpm (Max)	Bore		Dimensions							Weight Kg (Max Bore)
				D (Pilot)	D (Max)	A	B	L	DBSE		Total Length		
									Std Hub	Reverse Hub	Std Hub	Reverse Hub	
									G	G1	TL	TL1	
RTP-103	0.45	43	7500	13	36	103	59	38	46	8	122	84	1.2
RTP-117	0.66	63	7500	13	42	117	66	38	46	8	122	84	1.5
RTP-138	1.15	110	7500	13	48	138	80	44	59	**8**	147	**96**	2.6
RTP-163	1.89	181	7500	13	55	163	93	44	59	**8**	147	**96**	3.6
RTP-211	4.34	414	5800	21	78	211	138	58	69	**12**	185	**128**	9.8
RTP-319	14.99	1432	3800	31	115	319	222	82	97	**8**	261	**172**	32.4
RTP-357	26.50	2531	3600	31	123	357	235	85	109	**18**	279	**188**	39.5

POLYGEAR COUPLINGS
TYPE RPG

RATHI® Europe

- Double cardanic curve tooth gear coupling
- Operating temp.. range -25° C to +100° C
- Accommodated axial, parallel and angular shaft misalignment
- Suitable for vertical and horizontal application
- Simple & easy to assemble - Axial Plug In
- Low weight & low inertia
- Maintenance free due to combination of steel & nylon
- Useful for all applications of general engineering & hydraulics

RPG Coupling

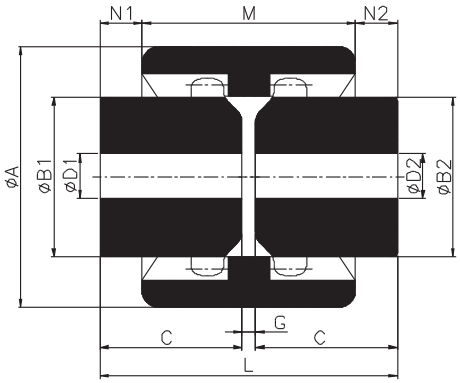

TECHNICAL DATA

Coupling Size	Rating at 100 rpm		Rated Torque (N-m)	Max. Speed rpm	Max. Bore (ØD1,ØD2) mm	ØA	ØB1, ØB2	C	G	M	N1, N2	Wt. in kg.	M.I. (WR²) in kgm²	Maximum Misalignment		
	KW	HP												Axial ± mm	Radial ± mm	Angular #
RPG-14	0.10	0.13	10	14000	15	40	25	23	4	37	6.5	0.10	0.26	1	0.3	±1°
RPG-19	0.17	0.22	16	11800	20	48	32	25	4	37	8.5	0.23	0.47	1	0.3	±1°
RPG-24	0.21	0.28	20	10600	24	52	36	26	4	41	7.5	0.32	0.93	1	0.4	±1°
RPG-28	0.47	0.63	45	8500	28	66	44	40	4	46	19	0.74	3.09	1	0.4	±1°
RPG-32	0.63	0.84	60	7500	32	76	50	40	4	48	18	0.95	5.48	1	0.4	±1°
RPG-38	0.84	1.12	80	6700	38	83	58	40	4	48	18	1.23	8.68	1	0.4	±1°
RPG-42	1.00	1.34	100	6000	42	92	65	42	4	50	19	1.5	14.28	1	0.4	±1°
RPG-48	1.50	2.01	140	5600	48	95	68	50	4	50	27	1.81	18.34	1	0.4	±1°
RPG-65	4.00	5.36	380	4000	65	132	96	55	4	68	23	4.35	84.80	1	0.4	±1°

ON EACH HUB

L = C1 + C2 + G

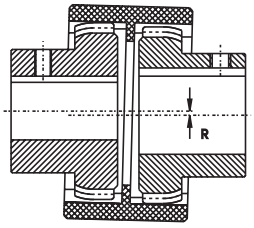

RADIAL MISALIGNMENT (R)

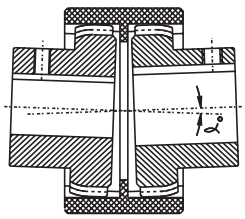

ANGULAR MISALIGNMENT (α°)

Order Sequence	Coupling Size	Finish Bore (Driver)	Finish Bore (Driven)
Example	RPG-28	Ø 20	Ø 25

All dimensions are in mm unless otherwise specified.
For vertical installation contact RATHI.

GUIDELINES FOR ASSEMBLY

Both the hubs must be assembled in such a way that they are flush with shaft ends. Maintain gap 'G' as mentioned in the table. If it is difficult to measure dimension 'G', use overall length to determine the same.

It is important that the sleeve slides easily in the axial direction. Accurate alignment of shafts improves the life of this coupling.

JAW FLEX COUPLINGS
TYPE SWF / SWSF

RATHI® Europe

SWF

Special Features :

Std. duty flange type coupling. The couplings permit close coupled unit. Reduce assembly and installation time. Couplings eliminate extension shaft / jack shaft... Cut original equipment costs and can be mounted directly on engine flywheel.

Applications :

Equipment assembled with gasoline engines.

SWSF

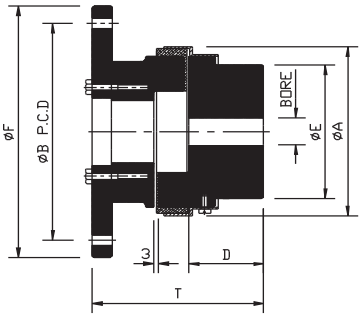

TYPE SWF

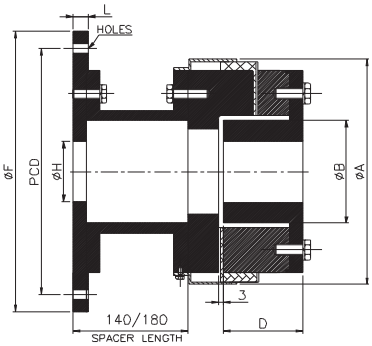

TYPE SWSF

TECHNICAL DATA - SWF

SAE Size (Inch)	*	Coupling Size	Synthetic Rubber Rating kW/ 100 rpm	Flange Dimensions Inch O.D. Ø F	P.C.D. Ø B	No. of Holes	Hole Dia.	Hub Dimensions mm O.D. Ø A	Hub Dia. Ø E	Length thru' Bore D	Overall length T	Bore Min.	Bore Max.
6 1/2"	5	SWF 226	3.4	8 1/2"	7 7/8"	6	21/64"	153	119	70	134	25	70
8"	–	SWF 226	3.40	10 3/8"	9 5/8"	6	13/32"	153	119	70	134	25	70
		SWF 276	5.60					173	127	80	146	25	75
10"	3 & 4	SWF 226	3.40	12 3/8"	11 5/8"	8	13/32"	153	119	70	140	25	70
		SWF 280	8.2					208	140	80	154	30	80
11 1/2"	2 & 3	SWF 190	2					129	102	54	114	15	60
		SWF 225	2.8					142	111	64	124	15	65
		SWF 226	3.4	13 7/8"	13 1/8"	8	13/32"	153	119	70	140	25	70
		SWF 276	5.6					173	127	80	152	25	75
		SWF 280	8.2					208	140	80	154	30	80
		SWF 2955	22.3					253	180	108	192	30	105
14"	1	SWF 226	3.4					153	119	70	144	25	70
		SWF 276	5.6					173	127	80	156	25	75
		SWF 280	8.2	18 3/8"	17 1/4"	8	17/32"	208	140	80	158	30	80
		SWF 295	13.4					253	162	95	183	30	95
		SWF 2955	22.3					253	180	108	196	30	105

TECHNICAL DATA - SWSF

SAE Size (Inch)	Coupling Size	Rated Torque Nm	kW Rating at 1500 rpm	O.D. Ø A	Hub Dia. Ø B	Length thru' bore D	Bore Min.	Bore Max.
10"	226	327	51.45	153	60	60	25	36
	276	532	84	173	70	60	25	42
	280	782	123	208	90	65	30	55
11 1/2"	226	327	51.45	153	60	60	25	36
	276	532	84	173	70	60	25	42
	280	782	123	208	90	65	30	55
	2955	2132	336	253	106	80	30	65
14 "	226	327	51.45	153	60	60	25	36
	276	532	84	173	70	60	25	42
	280	782	123	208	90	65	30	55
	295	1279	201	253	106	80	30	65
	2955	2132	336	253	106	80	30	65

FLANGE DETAILS (FOR SWSF)

SAE size (Inch)	Flange O.D. Ø F	P.C.D. of Holes	No. of Holes	Hole Dia.	L mm	Ø H mm
10"	12 3/8"	11 5/8"	8	13/32"	16	TO SUIT
11 1/2"	13 7/8"	13 1/8"	8	13/32"	16	
14"	18 3/8"	17 1/4"	8	17/32"	20	

- All dimensions are in mm, unless otherwise noted.
- For vertical installation contact RATHI.

★ Preferred SAE flywheel connection.

All dimensions are in mm unless otherwise specified.

METRIC BORE & KEYWAYS : IS:2048-1983 / BS 4235-1:1972 (Dimensions comply with DIN 6885/1)

SR. NO.	BORE SIZE (A)		KEYWAY WIDTH (B)		KEYWAY DEPTH (C)		SET SCREW SIZE
	H7		Js9				
1	11	+0.018 -0.000	4	±0.015	12.8	+0.1 -0.0	M5 X 0.8P
2	14		5		16.3		
3	19	+0.021 -0.000	6	±0.018	21.8	+0.2 -0.0	M6 X 1P
4	24		8	±0.022	27.3		
5	28		8		31.3		
6	34	+0.025 -0.000	10		37.3		M10 X 1.5P
7	38		10		41.3		
8	42		12		45.3		
9	48		14	±0.027	51.8		M12 X 1.75P
10	55	+0.030 -0.000	16		59.3		
11	60		18		64.4		
12	65		18		69.4		
13	75		20	± 0.033	74.9		
14	80		22		85.4		M16 X 2P
15	85	+0.035 -0.000	22		90.4		
16	100		28		106.4		
17	110		28		116.4		M20 X 2.5P
18	115		32		122.4		
19	120		32		127.4		
20	125	+0.040 -0.000	32		132.4		
21	130		32		137.4		
22	135		36		143.4	+0.3 -0.0	
23	140		36		148.4		
24	145		36		153.4		
25	150		36		158.4		

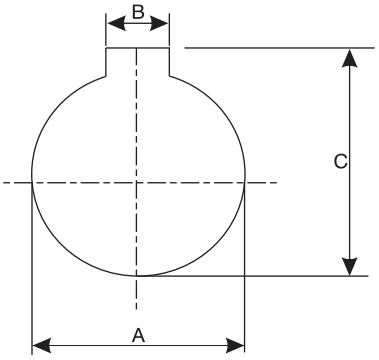

Imperial Bores
Data available on request.

ELASTOMERIC FLEXIBLE MEMBERS FAILURE MODE CAUSES

The investigation procedure is somewhat tougher here. There are many types of elastomers used in various elastomeric couplings. A guideline of failure mode & causes are given below :-

FAILURE MODE	PROBABLE CAUSE	CORRECTIVE ACTION
Worn flexing element or shaft bushings. Shaft bearing failure. High-pitched or staccato noise.	Excessive shaft misalignment.	Realign coupling and shaft to meet specified tolerances.
Ruptured elastomeric flexing element. Sheared hub, pins or teeth. Loose hubs on shaft, sheared keys.	torsional shock overload.	Find and eliminate cause of overload. Use larger coupling.
Fatigue of flexible element. Overheated elastomeric tyre or sleeve. Fatigue or hub pins or discs. Worn gear teeth. Staccato or clacking noise. Loose hub on shaft, keyseat wallos.	1. Torsional vibration. 2. Excessive starts and stops. 3. High peak-to-peak torsional overloads.	1 & 2 Use larger coupling. 3 Add flywheel to hub.
Shaft bearing failures. High-pitched whine. Motor thrust bearing failure.	Lubricant failure.	Replace or rebuild coupling.
Swollen or cracked elastomeric flexible member. Lubricant failure. Severe hub corrosion.	Chemical attack.	Use more chemically resistant flexing member or hub. Coat hubs.
Distorted or deteriorated elastomeric flexing member. Lubricant failure.	Excessive heat.	Use special high-temperature rubber compounds and lubricants.
Shattered flexing member. Lubricant failure.	Low temperature. (below - 18°C)	Use special low-temperature rubber compounds and lubricants.

COMPREHENSIVE PERFORMANCE HISTORY

In reality, the flexible coupling is a mechanical fuse. The failure of this fuse, which is usually the cheapest component in the driveline, should be welcomed. For it thus indicates trouble in the system and a major component failure is avoided. However, if the coupling failure presents a hazard, as it could on a manned lift or an overload crane, point out this hazard vividly to the manufacturer.

Distribution throughout the world

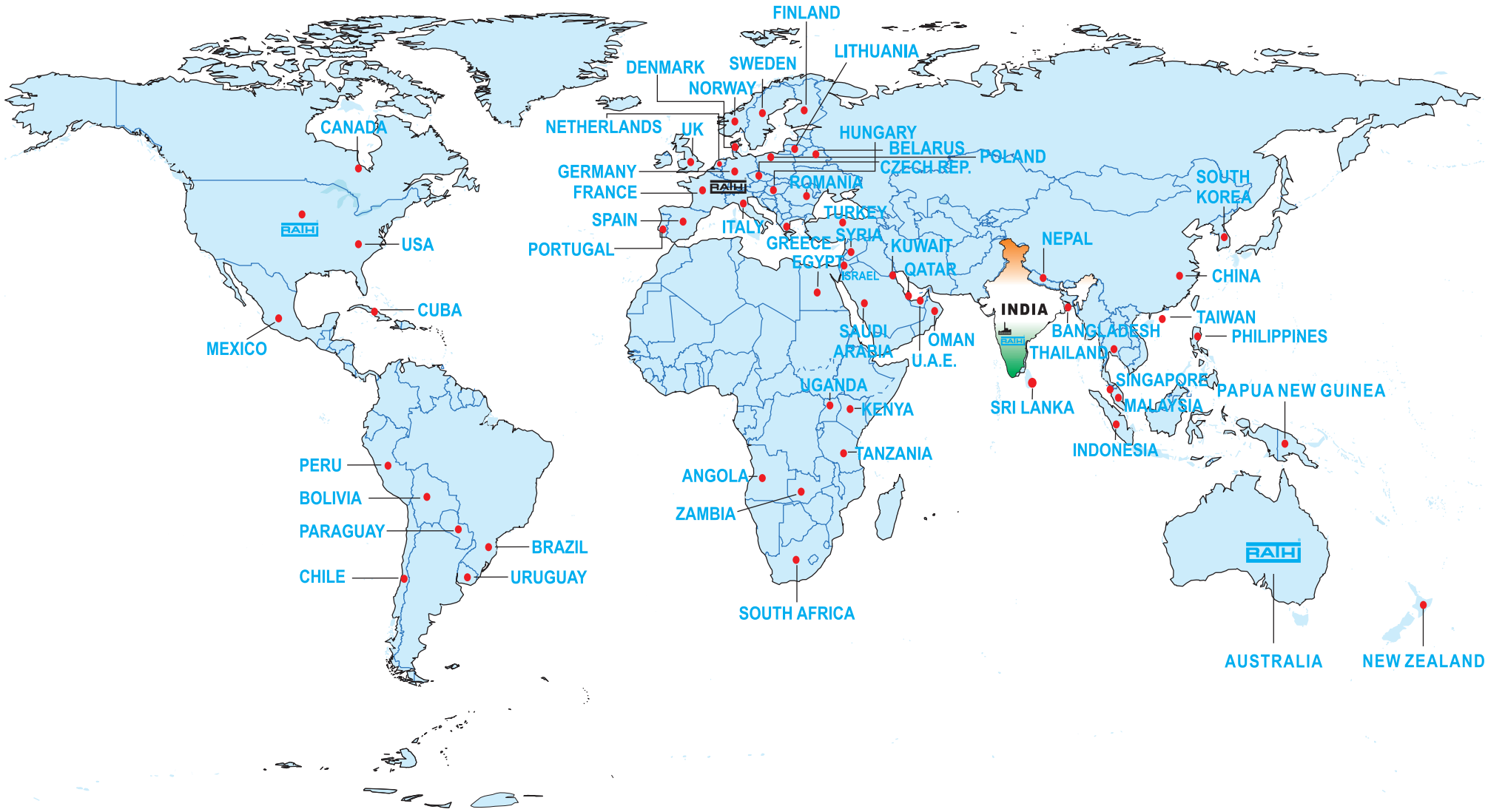

ISO 9001
BUREAU VERITAS
Certification
UKAS QUALITY MANAGEMENT 008

Manufacturer
Rathi Transpower Pvt Ltd
Gaia Apex, S. No. 33/2D, Viman Nagar
Pune 411 014.(INDIA)
Phone : 91-20-30517201
Fax : 91-20-30517212
E-mail : export.inquiry@rathigroup.com
Website : www.rathicouplings.com

European Operation
Rathi Europe GmbH
Im Wied 2, D-32683,
Barntrup, Germany
Phone : +49 (0) 5263 9561 840
Fax : +49 (0) 5263 9561 849
E-mail : sales@rathi-europe.com
Website : www.rathicouplings.com

Australian Operation
Rathi Polybond Pty Ltd
Unit 9/56, Smith Road,
Springvale,
Victoria 3171
Tel. : 03-9558 6922
E-mail : sales@rathipolybond.com
Website : www.rathipolybond.com

North America
Rathi North America
P.o. Box 42, N56 W13855
Silver Spring DR.
Menomonee Falls,
Wi 53051 United States USA
E-mail : ————
Website : www.rathicouplings.com

Distributor